444 MAPLE AVENUE WEST

SITE PLAN

TOWN OF VIENNA, VIRGINIA

DEPARTMENT OF PUBLIC WORKS NOTES

1) WATERLINES, ALL WATERLINE INSTALLATION SHALL SUBSCRIBE TO THE TOWN OF VIENNA'S CONSTRUCTION STANDARDS AND SPECIFICATIONS INCLUDING BUT NOT LIMITED TO THE FOLLOWING:
   a. WATERLINES SHALL HAVE A MINIMUM COVER OF FOUR FEET (4'), UNLESS OTHERWISE SHOWN ON THE DRAWING, MEASURED FROM THE TOP OF THE PIPE TO THE FINISHED GROUND ELEVATION. IN NO EVENT SHALL THE DEFLECTION PER JOINT OF LENGTH EXCEED THE RECOMMENDED MAXIMUM DEFLECTION AS SET FORTH BY THE PIPE MANUFACTURER.
   b. FIRE HYDRANTS SHALL BE PLACED A MINIMUM OF EIGHTEEN INCHES (18") OR A MAXIMUM OF THIRTY-SIX INCHES (36") FROM THE FACE OF THE CURB, MEASURED FROM THE FACE OF THE CURB TO THE CENTER OF THE BARREL, AT A POINT ON THE HYDRANT IMMEDIATELY BELOW THE SWIVEL FLANGE. THE PUMPER NOZZLE SHALL BE EIGHTEEN INCHES (18") ABOVE THE CURB.
   c. FIRE HYDRANTS SHALL BE SO PLACED THAT THEY DO NOT FALL WITHIN THE SIDEWALK, UNLESS SO DIRECTED BY THE INSPECTOR FOR THE TOWN OF VIENNA.
   d. A SUITABLE SUMP MUST BE PROVIDED TO ALLOW DRAINING OF THE HYDRANT. FIRE HYDRANTS SHALL NOT TO BE PLACED IN FILL SECTIONS.
   e. HYDRANTS SHALL BE PLACED ON FIRM FOUNDATION TO SUPPORT THE UNDERBASE AND A CONCRETE BLOCK BRACE SHALL BE POURED AGAINST FIRM UNDISTURBED GROUND TO KEEP THE HYDRANT FROM BLOWING OFF.
   f. GRAVEL SHALL BE PLACED AROUND CIRCUMFERENCE OF THE HYDRANT BASE FOR A DISTANCE OF TWELVE INCHES (12") AND A HEIGHT OF EIGHTEEN INCHES (18") TO ASSURE POSITIVE DRAINAGE OF HYDRANT BARREL. GRAVEL SHALL BE CLEAN AND NOT LESS THAN THREE-FOURTHS INCH (3/4") SIZE.
   g. POLYETHYLENE ENCASEMENT SHALL BE PROVIDED AROUND ALL WATER LINES, ENCASEMENT SHALL BE SEAMLESS AND IN ACCORDANCE WITH ANSI/AWWA STANDARD CLOS CLASS C, AND SHALL BE INSTALLED IN ACCORDANCE WITH PROCEDURES DESCRIBED IN ANSI/AWWA STANDARD CLOS AROUND THE WATER MAIN, INCLUDING ALL PIPE, FITTINGS, VALVES, HYDRANTS AND BRANCH CONNECTIONS WHERE SHOWN ON THE PLANS. THERE SHALL BE TWO FEET OF OVERLAP BETWEEN THE CUT SECTIONS OF POLYETHYLENE. ALL OVERLAPPING SECTIONS SHALL BE COMPLETELY TAPED IN ORDER TO HOLD THEM IN POSITION DURING BACKFILLING. ALL HOLES, SLITS, OR OPENINGS OF ANY SIZE SHALL BE REPAIRED IN ACCORDANCE WITH THE MANUFACTURER'S RECOMMENDATION SUCH THAT THE INTEGRITY OF THE POLYETHYLENE ENCASEMENT IS COMPLETELY RESTORED TO THE SATISFACTION OF THE TOWN. POLYETHYLENE ENCASEMENT WILL NOT BE REQUIRED FOR WATER MAIN INSTALLED INSIDE OF VAULT STRUCTURES.
2) SEWER LINES: ALL SEWER LINE INSTALLATION SHALL SUBSCRIBE TO THE TOWN OF VIENNA'S CONSTRUCTION STANDARDS AND SPECIFICATIONS INCLUDING BUT NOT LIMITED TO THE FOLLOWING:
   a. PVC SEWER PIPE SHALL BE SCHEDULE 35 AND SHALL CONFORM TO THE A.S.T.M. DESIGNATION D3034.
   b. INFILTRATION TEST, THE INFILTRATION INTO THE COMPLETED SEWER SHALL NOT EXCEED A RATE OF TWO-HUNDRED (200) GALLONS PER INCH OF DIAMETER, PER MILE, PER DAY FOR EIGHT INCH (8") UP TO AND INCLUDING TWENTY-FOUR INCH (24") DIAMETER AND NOT MORE THAN FIVE-THOUSAND (5,000) GALLONS PER MILE, PER DAY FOR ALL SIZED OVER TWENTY-FOUR INCH (24") DIAMETER. FOR SHORT STRETCHES OF LESS THAN FIVE-HUNDRED FEET (500'), RATES UP TO FIFTY PERCENT (50%) MORE THAN THE ABOVE AMOUNTS WILL BE PERMITTED PROVIDED THAT THE TOTAL LEAKAGE IN THE COMPLETED CONTRACT DOES NOT EXCEED THE ABOVE LIMITS.
   c. TESTS FOR INFILTRATION SHALL BE MADE UNDER THE DIRECTION OF THE TOWN AND AT LOCATIONS SELECTED BY HIM. ALL LABOR, TEMPORARY EQUIPMENT, AND MATERIALS INCLUDING WEIRS NECESSARY FOR SUCH TESTS SHALL BE FURNISHED BY THE CONTRACTOR WITHOUT ADDITIONAL COMPENSATION. SUFFICIENT WEIR MEASUREMENTS SHALL BE MADE IN MANHOLES TO FURNISH THE NECESSARY INFORMATION. WHERE WEIR MEASUREMENTS ARE NOT SUITABLE IN THE TOWN'S OPINION, OTHER METHODS OF MEASUREMENTS AS HE SHALL DETERMINE MAY BE ADOPTED. WHERE PRACTICABLE, SEWERS SHALL BE TESTED IN LENGTHS BETWEEN MANHOLES OF NOT MORE THAT FIFTEEN-HUNDRED FEET (1,500').
   d. SEWERS WILL NOT BE TESTED FOR INFILTRATION UNTIL AT LEAST TWO (2) WEEKS AFTER INSTALLATION AND PRIOR TO ANY SERVICE CONNECTIONS UNLESS OTHERWISE APPROVED BY THE TOWN. SEWERS WHICH FAIL TO MEET TESTS SHALL BE REPAIRED UNTIL NECESSARY REQUIREMENTS OF THIS SPECIFICATION, AS EVIDENCED BY SUBSEQUENT TESTS, ARE COMPLIED WITH.
3) STORMWATER LINES: ALL STORMWATER LINE INSTALLATION SHALL SUBSCRIBE TO THE TOWN OF VIENNA'S CONSTRUCTION STANDARDS AND SPECIFICATIONS.
4) THE OWNER MUST PHYSICALLY DISCONNECT EXISTING WATER, SEWER LATERALS THAT ARE TO BE ABANDONED AT THEIR CONNECTION TO THE PUBLIC MAIN.
5) THE CONTRACTOR SHALL FIELD VERIFY THE LOCATION OF EXISTING UNDERGROUND UTILITIES PRIOR TO INSTALLATION OF PROPOSED UTILITIES. A MINIMUM OF 18 INCHES VERTICAL AND FIVE FEET HORIZONTAL CLEARANCE SHALL BE MAINTAINED FROM ANY UTILITIES AND PUBLIC WATER AND SEWER MAINS.
6) ALL WATER AND SEWER FACILITIES SHALL BE INSTALLED BY A LICENSED CONTRACTOR IN THE STATE OF VIRGINIA.
7) ALL WATER AND SEWER CONSTRUCTION IS INSPECTED AND TESTED AS PER VIENNA STANDARDS PRIOR TO FINAL ACCEPTANCE BY THE TOWN.
8) THE VIENNA SEWER DEPARTMENT SHALL BE NOTIFIED AT A MINIMUM 48 HOURS (MONDAY THROUGH FRIDAY) PRIOR TO COMMENCING ANY WORK, TESTING, AND PRIOR TO MAKING ANY CONNECTIONS TO EXISTING SEWER LINES OR MANHOLES.
9) THERE SHALL BE NO UNMETERED CONNECTIONS TO THE TOWN'S WATER SYSTEM, INCLUDING CONNECTIONS BYPASSING METERS FOR TESTING ON-SITE PLUMBING OR FOR OBTAINING CONSTRUCTION WATER.
10) PRESSURE TESTING AGAINST VALVES WILL NOT BE ALLOWED.
11) A NOMINAL FOUR FEET OF COVER IS REQUIRED FOR ALL WATER MAINS AT FINAL GRADE.
12) THE USE OF A FIRE HYDRANT AS A WATER SOURCE IS PROHIBITED UNLESS A METER HAS BEEN OBTAINED FROM VIENNA FOR USE OF A SPECIFIC HYDRANT(S).
13) ABANDONMENTS OF EXISTING WATER AND SEWER CONNECTIONS ARE CLEARLY INDICATED ON THE PLANS WITH APPROPRIATE NOTES DESCRIBING HOW THE SERVICES ARE TO BE ABANDONED AT THE MAINS. INDIVIDUAL SERVICES MUST BE CUT AND THE REMAINING SERVICE LINE CRIMPED NOT LESS THAN 12" FROM THE MAIN AND NOT MORE THAN 3'. THE TOWN IS TO BE NOTIFIED 48 HOURS IN ADVANCE OF DISCONNECTION AND MAY INSPECT THE DISCONNECTION AT ITS CHOOSING SO AS TO PREVENT SLOW LEAKS, INCOMPLETELY TURN OFF CORPORATIONS AND OR FUTURE CONSTRUCTION ISSUES WITH TRENCHING THROUGH NONE CUT SERVICE LINES.
14) PER SECTION TOWN OF VIENNA CONSTRUCTION SPECIFICATIONS SECTION I.B.10 : SUPPORTS SHALL BE CONSTRUCTED BEHIND ALL BENDS, TEES, CAPS, PLUGS AND HYDRANTS. THE USE OF SUPPORTS BEHIND FITTINGS REFERS TO FITTINGS IN THE VERTICAL PLANE AS WELL AS THOSE USED IN THE HORIZONTAL PLAN." THEY SHALL BE DESIGNED TO CARRY THE LOAD THAT WILL REASONABLY BE REQUIRED OF THEM UNDER MAXIMUM HEAD AND A REASONABLE ALLOWANCE FOR WATER HAMMER."
15) POLYETHYLENE ENCASEMENT IS REQUIRED FOR ALL LINES IN VIENNA IN ACCORDANCE WITH ANSI/AWWA STANDARD C105 CLASS C, PER SECTION1.B.14.B OF THE VIENNA STANDARD CONSTRUCTION SPECIFICATIONS.

TOWN OF VIENNA - NOTES

1. A PRE-CONSTRUCTION MEETING MUST BE HELD PRIOR TO THE START OF CONSTRUCTION. CALL 703-255-6384 TO SCHEDULE THE PRE-CONSTRUCTION MEETING.
2. ALL CONSTRUCTION GENERATED DEBRIS MUST BE HAULED AWAY BY THE CONTRACTOR OR OWNER.
3. PRIOR TO THE REMOVAL OF ANY TOWN TREES (TREES WITHIN THE RIGHT OF WAY), THE APPLICANT OR THEIR REPRESENTATIVE SHALL CONTACT THE TOWN OF VIENNA ARBORIST AT 703-255-6360 TO COORDINATE HAVING THE TOWN ARBORIST ONSITE DURING ALL TOWN TREE REMOVAL.
4. TREE PROTECTION FOR ANY TOWN TREE, AS SHOWN ON PLAN, MUST BE INSTALLED PRIOR TO ANY SITE WORK.
5. IT IS UNLAWFUL TO PERFORM ANY CONSTRUCTION ABOVE FOUNDATION CORNERS PRIOR TO APPROVAL OF SETBACKS. WORK COMPLETED IN VIOLATION OF THIS REQUIREMENT IS SUBJECT TO DEMOLITION.
6. ALL DUMPSTERS/PODS ARE TO BE PLACED ON PRIVATE PROPERTY.
7. FRONT ELEVATION CHECKS ARE REQUIRED.
8. WALL CHECK SURVEYS ARE REQUIRED AND MUST BE SUBMITTED PRIOR TO CONSTRUCTION ABOVE FOUNDATION CORNERS.
9. A CERTIFICATE OF OCCUPANCY IS REQUIRED PRIOR TO OCCUPANCY. ALL REQUIRED DOCUMENTATION AND INSPECTION MUST BE SUBMITTED/COMPLETED BEFORE THE TOWN OF VIENNA WILL ISSUE A CERTIFICATE OF OCCUPANCY.
10. EXISTING SANITARY SEWER LATERALS ARE TYPICALLY CAPPED AT OR NEAR THE PROPERTY LINE. THE REUSE OF THE PORTION OF THE EXISTING SANITARY SEWER LATERAL BETWEEN THE TOWN OWNED SEWER MAIN AND THE CAPPED END MAY BE ALLOWED PROVIDING THAT A LICENSED PLUMBER CERTIFIES THAT THE EXISTING PIECE OF PIPE IS GRADED PROPERLY AND IN LIKE NEW CONDITION. THE REUSE OF A PORTION OF THE EXISTING LATERAL DOES NOT IMPLY THAT THE TOWN IS WARRANTING THE CONDITION IN ANY WAY.

CONSTRUCTION NOTES

CONTRACTOR AND DEVELOPER ARE ADVISED THAT ANY ELECTRONIC FILES ASSOCIATED WITH THE PREPARATION OF THESE PLANS WILL NOT BE RELEASED TO OTHERS FOR USE IN CONSTRUCTION STAKEOUT OR RELATED SERVICES.

1. THE EXISTING UNDERGROUND UTILITIES SHOWN HEREON ARE BASED UPON AVAILABLE INFORMATION. THE CONTRACTOR SHALL BE RESPONSIBLE FOR DETERMINING THE EXACT LOCATION OF ALL UTILITIES BEFORE COMMENCING WORK AND FOR ANY DAMAGES WHICH MAY OCCUR BY HIS FAILURE TO LOCATE OR PRESERVE THESE UNDERGROUND UTILITIES. IF DURING CONSTRUCTION OPERATIONS THE CONTRACTOR SHOULD ENCOUNTER UTILITIES OTHER THAN IN THOSE SHOWN ON THE PLANS, HE SHALL IMMEDIATELY NOTIFY THE ENGINEER AND TAKE NECESSARY AND PROPER STEPS TO PROTECT THE FACILITY AND ASSURE THE CONTINUANCE OF SERVICE.
2. THE CONTRACTOR SHALL DIG TEST PITS AS REQUIRED FOLLOWING NOTIFICATION AND MARKING OF ALL EXISTING UTILITIES BY MISS UTILITY TO VERIFY THE LOCATION AND DEPTH OF EXISTING UTILITIES. TEST HOLES TO BE PERFORMED AT LEAST 30 DAYS PRIOR TO START OF CONSTRUCTION. ANY DISCREPANCIES ARE TO BE REPORTED IMMEDIATELY TO THE OWNER AND ENGINEER. REDESIGN AND APPROVAL BY REVIEWING AGENCIES SHALL BE OBTAINED IF THIS INSTANCE OCCURS.
3. THE CONTRACTOR SHALL BE RESPONSIBLE FOR NOTIFYING THE OWNER AND THE ENGINEER OF ANY CHANGES OR CONDITIONS ATTACHED TO PERMITS OBTAINED FROM ANY AUTHORITY ISSUING PERMITS.
4. THE CONTRACTOR SHALL VISIT THE SITE AND SHALL VERIFY EXISTING CONDITIONS PRIOR TO STARTING CONSTRUCTION.
5. THE CONTRACTOR SHALL CLEAR THE SITE OF ALL TREES, BUILDINGS, FOUNDATIONS, ETC. WITHIN THE LIMITS OF CONSTRUCTION UNLESS OTHERWISE SPECIFIED, AND SHALL BE RESPONSIBLE FOR CAUSING EXISTING UTILITIES TO BE DISCONNECTED.
6. THE DEVELOPER SHALL PROVIDE OVER-LOT GRADING TO PROVIDE POSITIVE DRAINAGE AND PRECLUDE PONDING OF WATER.
7. FINISHED GRADES SHOWN FOR FINISHED TOP OF CURB GRADES ON EXISTING ROADS SHALL BE FIELD ADJUSTED AS REQUIRED TO CONFORM TO THE INTENT OF THE TYPICAL SECTION USING THE EXISTING EDGE OF PAVEMENT AS THE CONTROL POINT. A SMOOTH GRADE SHALL BE MAINTAINED FROM THE CENTERLINE OF THE EXISTING RIGHT-OF-WAY TO THE FACE OF CURB TO PRECLUDE THE FORMING OF FALSE GUTTERS AND/OR THE PONDING OF WATER ON THE ROADWAY. THE EXISTING PAVEMENT SHALL BE RECAPPED AND/OR REMOVED AND REPLACED AS REQUIRED TO ACCOMPLISH THIS REQUIREMENT. CURB FORMS SHALL BE INSPECTED AND APPROVED FOR HORIZONTAL AND VERTICAL ALIGNMENT BY CITY OF FALLS CHURCH INSPECTORS PRIOR TO PLACING OF CONCRETE. CONTRACTOR SHALL REFER TO THE ARCHITECTURAL AND STRUCTURAL DRAWINGS FOR FINISHED GRADES ON TOP OF STRUCTURED PARKING DECK.
8. AREAS ON OR OFF-SITE, WHICH ARE DISTURBED BY THIS CONSTRUCTION AND WHICH ARE NOT PAVED OR BUILT UPON, SHALL BE ADEQUATELY STABILIZED TO CONTROL EROSION AND SEDIMENTATION. THE MINIMUM ACCEPTABLE STABILIZATION SHALL CONSIST OF PERMANENT GRASS, SEED MIXTURE TO BE AS RECOMMENDED BY THE CITY AGENT. ALL SLOPES 3:1 AND GREATER SHALL BE SODDED AND PEGGED OR OTHERWISE STABILIZED IN A MANNER APPROVED BY THE TOWN OF VIENNA.
9. EXISTING WELLS SHALL BE PERMANENTLY ABANDONED IN ACCORDANCE WITH VIRGINIA STATE WATER CONTROL BOARD REQUIREMENTS.
10. ALL OVER HEAD POLE LINES SHALL BE RELOCATED OR REMOVED AS SHOWN BY THE OWNING UTILITY COMPANIES. THE CONTRACTOR SHALL BE RESPONSIBLE FOR MAKING ALL ARRANGEMENTS AND COORDINATING ALL WORK REQUIRED FOR THE NECESSARY RELOCATIONS.
11. SUBBASE MATERIAL SHOWN ON THE TYPICAL STREET SECTION SHALL CONFORM TO VDOT SPECIFICATIONS SECTION 209. PAVEMENT THICKNESS AS SHOWN ON THE PLAN ARE BASED ON AN ASSUMED SOIL SUPPORT VALUES (S.S.V.) OF 10 UNLESS OTHERWISE NOTED. A QUALIFIED SOILS TESTING FIRM SHALL BE ENGAGED BY THE CONTRACTOR TO DETERMINE THE ACTUAL S.S.V. IN ACCORDANCE WITH "A DESIGN GUIDE FOR SUBDIVISION PAVEMENTS IN VIRGINIA" BY N.K. VASWANI, OCTOBER 1973, VHRC 73-821 AS AMENDED. SOIL SUPPORT VALUES SHALL BE OBTAINED AT EACH CHANGE IN SUBGRADE SOILS AND AT A MAXIMUM SPACING OF 500 FEET WHERE SUBGRADE SOILS REMAIN CONSTANT. S.S.V. SHALL BE FURNISHED TO THE ENGINEER AND THE ENGINEER SHALL REVISE THE PAVEMENT DESIGN THICKNESS TO SHOW THE ACTUAL DEPTH OF PAVEMENT MATERIAL REQUIRED AND SHALL SUBMIT THE REVISION TO THE CITY OF FALLS CHURCH FOR REVIEW AND APPROVAL. THE CONTRACTOR IS ADVISED NOT TO BRING THE AREA SUBJECT TO THIS REVISION TO FINISHED GRADE UNTIL AFTER THE REVISED PAVEMENT SECTION IS APPROVED.
12. PRIOR TO BEGINNING CONSTRUCTION, CONTRACTOR SHALL VERIFY FROM THE ARCHITECTURAL DRAWINGS ALL DIMENSION, DETAILS, AND TREATMENTS FOR THE PROPOSED BUILDINGS, WALKWAYS, AND OTHER PROPOSED CONSTRUCTION WHERE INDICATED ON THE PLANS. ANY DISCREPANCIES SHALL IMMEDIATELY BE REPORTED TO DESIGN ENGINEER.
13. THE CONTRACTOR IS TO VERIFY INVERT, SIZE AND LOCATION OF BUILDING UTILITY CONNECTIONS WITH THE MECHANICAL PLANS PRIOR TO PLACEMENT OF UNDERGROUND UTILITIES.
14. NO UNDERGROUND SOILS INVESTIGATION HAS BEEN PERFORMED BY WALTER L. PHILLIPS, INC. ALL SOILS INFORMATION PRESENTED AS PART OF THIS SITE PLAN HAS BEEN PREPARED BY OTHERS AND IS INCLUDED AS REQUIRED FOR CITY OF FALLS SITE PLAN APPROVAL.
15. THE CONTRACTOR SHALL REMOVE EXISTING BUILDINGS, FENCES AND OTHER EXISTING PHYSICAL FEATURES AS REQUIRED.
16. ALL PROPOSED SIDEWALK, CG-6, CG-2 OR CG-6R IS TO BE CONSTRUCTED WITH A MINIMUM 6" AGGREGATE BASE. SEE SHEET C-0202 AND C-0203 FOR DETAILS
17. EXISTING CONSTRUCTION SHALL BE REMOVED TO NEAREST JOINT. NEW CONSTRUCTION SHALL BE PROVIDED AS SHOWN AND ANY DAMAGED AREA SHALL BE REPAIRED TO MATCH CONDITIONS EXISTING PRIOR TO CONSTRUCTION.
18. DAMAGE TO ANY EXISTING ENTRANCES, CURB AND GUTTER, PAVEMENT OR OTHER EXISTING STRUCTURES NOT PROPOSED TO BE DISTURBED WITH THIS DEVELOPMENT, WILL BE THE RESPONSIBILITY OF THE CONTRACTOR AND MUST BE REPAIRED TO THE SATISFACTION OF THE TOWN OF VIENNA, THE VIRGINIA DEPARTMENT OF TRANSPORTATION AND ANY ADJOINING OWNERS THAT MAY BE AFFECTED.
19. THE CONTRACTOR SHALL BE RESPONSIBLE FOR MAKING A SMOOTH TRANSITION TO EXISTING CURB.
20. ALL PRIVATE BUILDING CONNECTIONS ARE TO BE INSTALLED IN ACCORDANCE WITH THE CURRENT PLUMBING CODE.
21. SEE ARCHITECTURAL AND/OR LANDSCAPE DRAWINGS FOR DIMENSIONS AND DETAILS FOR ALL RETAINING WALLS. ALL ON-SITE RETAINING WALLS ARE SUBJECT TO A SEPARATE BUILDING PERMIT TO BE OBTAINED BY OWNER. THIS PLAN IS FOR APPROXIMATE LOCATION AND PROPOSED GRADING ONLY. GEOTECHNICAL AND STRUCTURAL DESIGN TO BE ACCOMPLISHED BY OTHERS. RETAINING WALLS SHOWN ON THIS PLAN ARE FOR THE PURPOSES OF DEMONSTRATING THE PROPOSED TOP AND BOTTOM ELEVATIONS AND LOCATION OF THE WALLS ONLY. RETAINING WALLS ARE TO BE MAINTAINED BY THE PROPERTY OWNERS.
22. TOPS OF EXISTING STRUCTURES WHICH REMAIN IN USE ARE TO BE ADJUSTED IN ACCORDANCE WITH THE GRADING PLAN. ALL PROPOSED STRUCTURE TOP ELEVATIONS ARE TO BE VERIFIED BY THE CONTRACTOR WITH THE SITE GRADING PLANS. IN CASE OF CONFLICT, THE GRADING PLAN SHALL SUPERSEDE PROFILE ELEVATIONS. MINOR ADJUSTMENTS TO MEET FINISHED GRADE ELEVATIONS MAY BE REQUIRED.
23. SEE LANDSCAPE PLAN FOR ALL ON-SITE SIDEWALK, PLANTING AND IRRIGATION DETAILS.
24. THE DESIGN, CONSTRUCTION, FIELD PRACTICES AND METHODS SHALL CONFORM TO THE REQUIREMENTS SET FORTH BY THE TOWN OF VIENNA AND ITS CURRENT ZONING ORDINANCE AND CONSTRUCTION STANDARDS MANUAL. FAILURE TO COMPLY WITH THE CODE, APPLICABLE MANUALS, PROVISIONS OF THE CONSTRUCTION AND ESCROW AGREEMENTS OR THE PERMITS SHALL BE DEEMED A VIOLATION.
25. THE APPROVAL OF THESE PLANS SHALL IN NO WAY RELIEVE THE OWNER/DEVELOPER OR HIS AGENT OF ANY LEGAL RESPONSIBILITIES WHICH MAY BE REQUIRED BY THE CODE OF VIRGINIA OR ANY ORDINANCE ENACTED BY THE GOVERNING AGENCY.
26. A MINIMUM PERMISSIBLE GRADE OF 1.00% IS REQUIRED FOR PAVEMENT TO ASSURE POSITIVE DRAINAGE. IF THERE IS EXISTING PAVEMENT WHICH IS TO REMAIN DISTURBED DURING CONSTRUCTION AND IS LESS THAN 1.00%, THEN THE CONTRACTOR IS TO CHECK TO MAKE SURE THE SITE AREA WILL HAVE ADEQUATE DRAINAGE.
27. NO EVIDENCE OF GRAVES OR BURIAL SITES HAS BEEN FOUND ON THIS PROPERTY.
28. CONSTRUCTION STAKEOUT SHALL BE UNDER THE DIRECT SUPERVISION OF A LICENSED LAND SURVEYOR IN THE COMMONWEALTH OF VIRGINIA.
29. CONTRACTOR TO COORDINATED TIE BACK LOCATIONS WITH EXISTING AND PROPOSED UTILITIES AND OBTAIN APPROVALS REQUIRED BY THE TOWN OF VIENNA.
30. ALL SITE WORK TO MEET TOWN OF VIENNA STANDARDS AND SPECIFICATIONS PER THE CURRENT PUBLIC INFRASTRUCTURE MANUAL (PIM). IF A STANDARD IS NOT INCLUDED IN THE PIM REFER TO THE FAIRFAX COUNTY PUBLIC FACILITIES MANUAL (PFM).
31. ALL STREET CUTS TO MEET VDOT STREET RESTORATION DETAILS
32. RELOCATED STORM SEWER TO BE INSTALLED AND BACKFILLED PER TOWN OF VIENNA STANDARDS.

SOILS MAP

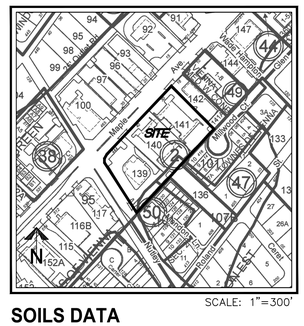

SOILS DATA

SOIL #'S	SERIES NAME	HYDROLOGIC SOIL GROUP	PROBLEM CLASS	FOUNDATION SUPPORT	SUBSURFACE DRAINAGE	ERODABILITY
95	URBAN LAND	N/A	IVB	N/A	N/A	N/A
107B	WHEATON-MEADOWVILLE COMPLEX	D	IVB	FAIR	MARGINAL	MEDIUM

NOTE:
STRUCTURAL ENGINEER TO DETERMINE LEVEL OF REQUIRED INVESTIGATION FOR BUILDING DESIGN PURPOSES.

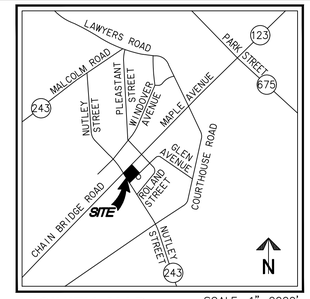

VICINITY MAP

SHEET INDEX

C-0101 COVER SHEET
C-0201 ZONING TABULATIONS
C-0202 DETAILS -CURB & GUTTER
C-0203 DETAILS - RAMPS & ENTRANCES
C-0204 DETAILS - WATER LINE
C-0205 DETAILS - STORM
C-0206 DETAILS - STORM
C-0207 DETAILS - STORM
C-0301 EXISTING CONDITIONS PLAN
C-0302 DEMOLITION PLAN
C-0303 AS-BUILT DATA
C-0401 GEOMETRIC AND PAVEMENT PLAN
C-0402 LAYOUT PLAN
C-0403 LAYOUT ENLARGEMENTS
C-0404 UTILITY PLAN
C-0404A WATER METER SIZING
C-0402B WATER METER ENLARGEMENT
C-0405 EASEMENT PLAN
C-0501 GRADING PLAN
C-0502 GRADING ENLARGEMENTS
C-0503 ADA ENLARGEMENTS
C-0504 OVERLAND RELIEF ANALYSIS
C-0601 EROSION AND SEDIMENT CONTROL PLAN - PHASE 1
C-0602 EROSION AND SEDIMENT CONTROL PLAN - PHASE 2
C-0603 EROSION AND SEDIEMNT CONTROL NOTES
C-0604 EROSION AND SEDIEMNT CONTROL DETAILS
C-0701 STORMWATER OUTFALL ANALYSIS
C-0702 PRE AND POST DEVELOPMENT DRAINAGE AREAS
C-0702A INLET DRAINAGE DIVIDES
C-0703 STORMWATER MANAGEMENT AND BMP COMPUTATIONS AND NARRATIVES
C-0704 PERMEABLE PAVEMENT PLAN, COMPUTATIONS AND DETAILS
C-0705 PERMEABLE PAVEMENT SPECIFICATIONS
C-0706 STORMWATER DETAILS
C-0707 STORMWATER MANAGMENT HYDROGRAPHS
C-0708 STORMTECH DETAIL
C-0708A STORMTECH DETAIL
C-0801 STORM SEWER PROFILES
C-0802 STORM SEWER PROFILES
C-0901 SANITARY SEWER PROFILES
C-0902 WATERLINE PROFILES
C-1001 VEHICLE MOVEMENTS
C-1002 VEHICLE MOVEMENTS
C-1101 SIGHT DISTANCE PLAN & PROFILE - MAPLE AVENUE
C-1102 SIGHT DISTANCE PLAN & PROFILE - NUTLEY STREET
C-1201 TREE PRESERVATION PLAN
C-1202 TREE PRESERVATION NOTE AND DETAILS
C-1301 FIRE MARSHAL PLAN
C-1302 FIRE TRUCK ACCESS PLAN
C-1401 DRY UTILITY PLAN
C-1402 DRY UTILITY PROFILES
C-1403 DRY UTILITY PROFILES
C-1404 DRY UTILITY PROFILES
A2-00 BASEMENT FLOOR PLAN
A2-01 1ST FLOOR PLAN
A4-01A SECTIONS
LS-1.01 MATERIALS PLAN
LS-1.02 MATERIALS PLAN
LS-1.03 MATERIALS PLAN
LS-1.04 MATERIALS PLAN
LS-1.05 LEVEL 2 WEST MATERIALS PLAN
LS-1.06 LEVEL 2 EAST MATERIALS PLAN
LS-4.01 HARDSCAPE DETAILS
LS-4.10 PLANTING DETAILS
LS-5.01 PLANTING PLAN
LS-5.02 PLANTING PLAN
LS-5.03 PLANTING PLAN
LS-5.04 PLANTING PLAN
LS-5.05 LEVEL 2 WEST PLANTING PLAN
LS-5.06 LEVEL 2 EAST PLANTING PLAN
LS-6.00 LIGHTING PLAN

NOTE:

NO SITE PLAN MODIFICATIONS REQUESTED

FIRE FLOW INFORMATION

SEE SHEET C-1302, FIRE MARSHAL APPROVAL WILL BE OBTAINED PRIOR TO TOWN APPROVAL.
FILE # 79830
FIRE MARSHAL APPROVAL – MICHAEL PARUTI
DATE 01/21/2021

GENERAL NOTES:

PROPERTY ADDRESS: 430,440,444 MAPLE AVENUE WEST
SITE AREA: 120,091 SF OR 2.76 ACRES
TYPE OF PLAN: MAPLE AVENUE REZONING APPROVED 10/29/2018
EXISTING ZONE: RS-16/C-1
PROPOSED/APPROVED ZONE: MAC
(SEE CLERK LETTER SHEET C-0201)
SEE SHEET C-0201 FOR ZONING TABULATIONS

Town of Vienna
Approved
Date 05/25/2021

OWNER INFORMATION:

VIENNA DEVELOPMENT ASSOCIATES, LLC
C/O HEKEMIAN & COMPANY
505 MAIN STREET, SUITE 300
HACKENSACK, NJ 07601
ATTN: CHRIS BELL (410) 626 9607

COMMUNITY CONTACT:

CHRIS BELL
CHRIS@HEKEMIAN.COM
(410) 626 9607

WALTER L. PHILLIPS INCORPORATED
ESTABLISHED 1945
Engineers • Surveyors • Planners
Landscape Architects • Arborists
207 PARK AVENUE
FALLS CHURCH, VIRGINIA 22046
(703) 532-6163 Fax (703) 533-1301
www.WLPINC.com

DRAWN: DL
CHECKED: KW

COMMONWEALTH OF VIRGINIA
KAREN L. S. WHITE
Lic. No.041850
05/25/21
PROFESSIONAL ENGINEER

DATE: SUB01: 9/13/2019, SUB02: 06/07/2020, SUB03: 4/19/2021
SUB04: 05/25/2021
SCALE: AS NOTED

REVISION APPROVED BY

NO.	DESCRIPTION	DATE	REV. BY	APPROVED	DATE

COVER SHEET

444 MAPLE AVENUE WEST
SITE PLAN
TOWN OF VIENNA, VIRGINIA

OPEN SPACE DIAGRAM

SCALE: 1" = 50'

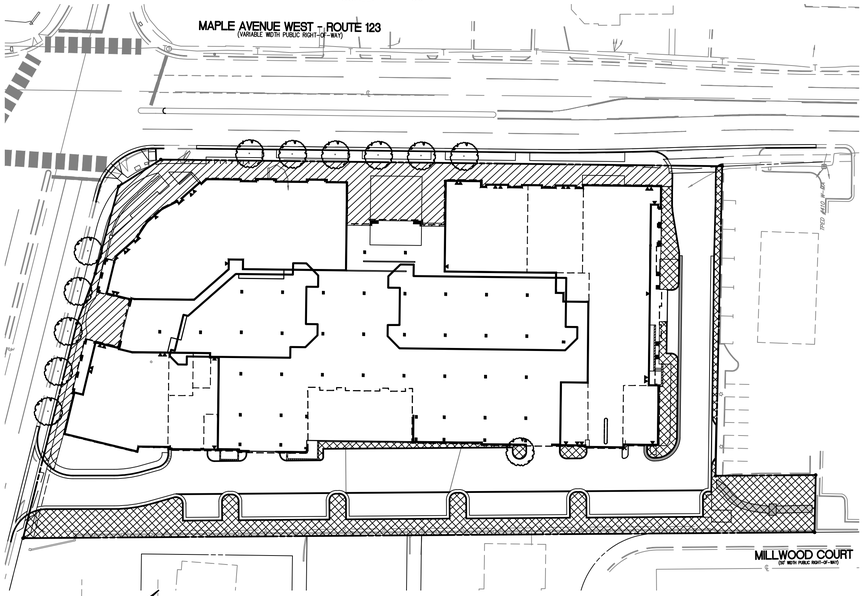

OPEN SPACE CALCULATION

LOT AREA:		120,091 SF (2.76 AC)
MIN OPEN SPACE REQUIRED	15% OF LOT AREA	18,014 SF MIN.
OPEN SPACE PROVIDED	20.0% OF LOT AREA	24,042 SF

OPEN SPACE – STREETSCAPE (10,755 SF)

OPEN SPACE – SIDE AND REAR (13,287)

ZONING TABULATION

PROPOSED ZONE: MAPLE AVENUE COMMERCIAL (MAC)

	MAC ZONING REQUIREMENTS	PROVIDED
LOT AREA	NONE	120,091 SF (2.76 AC)
LOT WIDTH	NONE	392.28'
BUILDING WIDTH	NONE	196'
BUILDING HEIGHT**	54'	51.47'
YARD REQUIREMENTS		
FRONT ON MAPLE	20' MINIMUM TO FACE OF CURB	20.1'
FRONT OF NUTLEY	15' MINIMUM TO FACE OF CURB	15.7'
SIDE (EAST PL)	WITH WALLS OR DOORS = 8' IF ABUTS A COMMERCIAL USE	40.3'
REAR (SOUTH PL)	20'	58.1'
MAX IMPERVIOUS SURFACE	80% OF THE LOT + 5% INCENTIVE BONUS = 85% (102,077 SF)	84.7% (101,664 SF)
OPEN SPACE	15% OF LOT AREA (18,014 SF)	20.0% (24,042 SF)
LOADING		
LOADING SPACE DEPTH	25'	38' MINIMUM
LOADING SPACE WIDTH	15'/50' OF BUILDING WIDTH = 60' TOTAL	25',35' (60' TOTAL)
LOADING SPACE HEIGHT	15'	17' RES.; 19' RETAIL

**AVERAGE GRADE = 389.0

FINISHED LOT GRADE CALCULATION

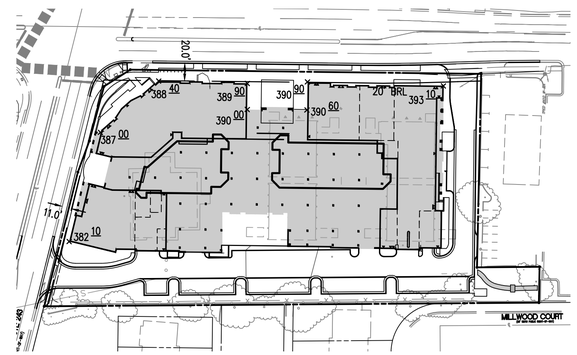

AVERAGE GRADE CALCULATIONS ALONG THE MAPLE AVE AND NUTLEY ST FRONTAGE.

393.1+390.9+390.6+390.0+389.9+388.4+387.0+382.1 = 3112

3112/8 = 389.0

MAX ROOF ELEVATION: 389.0+54.0 = 443.0

PROPOSED ROOF ELEVATION = 440.47

SCALE: 1" = 80'

80 0 40 80 160 320

(IN FEET)
1 INCH = 80'

IMPERVIOUS AREA DIAGRAM

SCALE: 1" = 50'

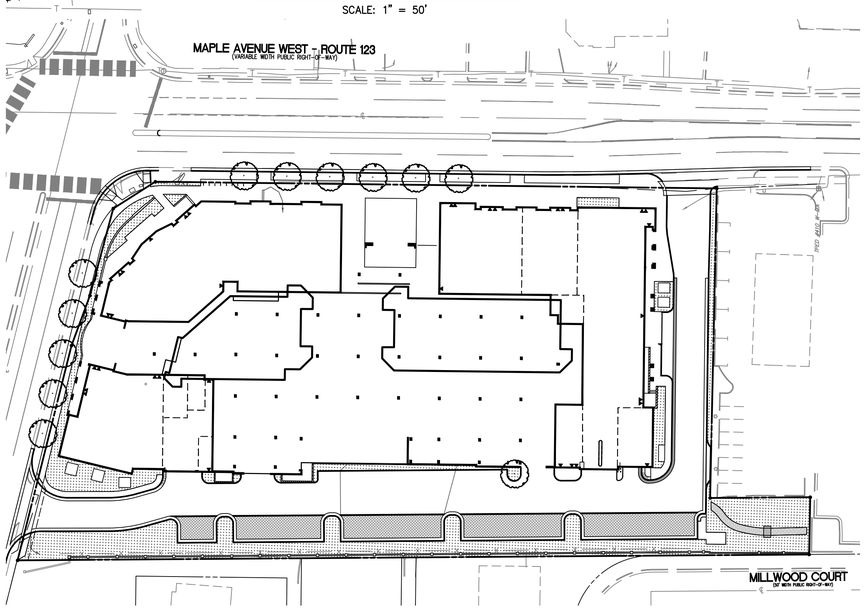

PARKING TABULATION

UNIT SUMMARY

UNIT	UNITS	RATIO
STUDIO	9	6.0%
1 BEDROOM	84	56.0%
2 BEDROOM	57	38.0%
TOTAL	150	

PARKING SUMMARY

PARKING REQUIRED	REQUIREMENT	REDUCTION*
RESIDENTIAL	249	212
RETAIL	168	144
TOTAL PARKING REQUIRED	**417**	**356**
PARKING PROVIDED	**ACTUAL**	**BONUS****
RESIDENTIAL (BASEMENT)	181	226
RETAIL (GROUND FLOOR / SURFACE)	127	148
TOTAL PARKING PROVIDED	**308**	**374**

*15% REDUCTION BASED ON VIENNA ZONING CODE SECTION 18-95.19
**25% BONUS BASED ON VIENNA ZONING CODE SECTION 18-95.10 A
***Assumed 1 seat per 15 SF
****PARKING TOTALS EXCLUDE COMPACT SPACES

PARKING DETAILS

PARKING REQUIRED	COUNT	RATIO	REQUIREMENT	REDUCTION*	
RESIDENTIAL					
STUDIO	9	1 / UNIT	9	x0.85	8
1 BEDROOM	84	1.5 / UNIT	128	x0.85	109
2 BEDROOM	57	2 / UNIT	112	x0.85	95
TOTAL	150		249		212
RETAIL					
RETAIL	11,052 SF	5 / 1000 SF	56	x0.85	48
RESTAURANT	368 SEATS***	1 / 4 SEATS	92	x0.85	79
OUTDOOR SEATING	79 SEATS***	1 / 4 SEATS	20	x0.85	17
TOTAL			168		144
TOTAL PARKING REQUIRED			**417**		**356**

PARKING PROVIDED	GARAGE (G)	SURFACE (S)	TOTAL	BONUS**	
RESIDENTIAL PARKING	181	0	181	Gx1.25+S	226
RETAIL PARKING	84	43	127	Gx1.25+S	148
TOTAL PARKING PROVIDED	**265**	**43**	**308**		**374**

COMPACT PARKING DETAILS

COMPACT PARKING RATIO			**5.2%**
RESIDENTIAL PARKING PROVIDED	ACTUAL		BONUS**
STANDARD (100% OF REQUIRED SPACES)	181	Gx1.25+S	228
COMPACT (0% OF REQUIRED SPACES)	16	Gx1.25+S	21
TOTAL	197		249
RESIDENTIAL PARKING REQUIRED AFTER REDUCTION*			211
SURPLUS PARKING AFTER BONUS AND REDUCTION * **			38

BICYCLE PARKING DETAILS

PARKING REQUIRED	
RESIDENTIAL (1 / 10 DU LONG TERM + 1 / 50 DU SHORT TERM)	18
RETAIL (1 / 5,000 SF PUBLIC + 1 / 25,000 SF EMPLOYEE)	5
TOTAL PARKING REQUIRED	**23**
PARKING PROVIDED	
RESIDENTIAL (INTERIOR)	32
RESIDENTIAL (EXTERIOR)	12
RETAIL	6
TOTAL PARKING PROVIDED	**50**

Town of Vienna Virginia

Department of Planning and Zoning

MAC ZONE DESIGNATION APPLICATION INCENTIVES SHEET

Please check boxes for all incentives being requested

Type of Incentive Requested	Minimum Number of Features to be Provided		
	From Schedule A	From Schedule B	
A five percent increase in the maximum impervious surface	2	2	⊗
A ten percent increase in the maximum impervious surface	2	3	○
A 7.5 percent reduction in the minimum number of parking spaces required	1	2	○
A 15 percent reduction in the minimum number of parking spaces required	2	3	⊗
Inclusion of a mezzanine level for a commercial use which shall not count as an additional story.	1	1	○

Please check boxes for all incentive features being used in MAC project

Schedule	Type of Feature	
GREEN BUILDING CERTIFICATION		
AA	Designed to Earn the Energy Star certification (EPA program)	○
B	Structure design that can accommodate the installation and operation of solar photovoltaic panels or solar thermal heating devices (including appropriate wiring and water transport systems)	⊗
BBB	Construction of the principal structure to meet or exceed LEED Silver certification standards or another equivalent green building certification program	○
BB	Construction of the principal structure to Earn the Design for Energy Star certification or similar program	○
WATER CONSERVATION AND QUALITY PROTECTION		
AA	Configuration of the principal structure's roof so that at least 50 percent of the roof is a "green" roof intended to capture and hold rain water	○
A	Inclusion of rain water capture and re-use devices such as cisterns, rain filters, and underground storage basins with a minimum storage capacity of 500 gallons	○
A	Provision of open space set-asides at a rate 200 percent or more beyond the minimum required	○
B	Provision of rain gardens or other appropriate stormwater infiltration system(s) of at least two percent of the total site area.	⊗
B	Use of xeriscape landscaping techniques without irrigation	○
SITE CONFIGURATION		
AA	Inclusion of underground parking or parking structures sufficient to accommodate 51 percent or more of the off-street parking requirements	⊗
AA	Closure of one existing accessway, vehicular entrance or driveway on Maple Avenue	⊗
A	Provision of public art with a value meeting at least one percent of the total construction cost	○
A	Provision of all required long-term bicycle parking spaces in weather-protected rooms or cages with controlled access for bicycle users, and that also contain racks for the secure attachment of bicycles using a lock or other similar device.	○
BB	Provision of transit facilities (e.g., designated park-and-ride parking spaces, bus shelters*, bicycle share facilities or similar features)	⊗
B	Inclusion of showering and dressing facilities in nonresidential development for employees using alternative forms of transportation	⊗
B	Provision of at least one enclosed recycling station per building suitable for storage and collection of recyclable generated on-site	⊗
BBB	Provision of public parking in an amount to exceed 110 percent of the required parking for the development	○

*The location and installation of the bus shelter shall receive an agreement of the pertinent transit authority prior to the zoning approval

127 Center Street, South • Vienna, Virginia 22180
p: (703) 255-6341 • f: (703) 255-5729 • TTY711
www.viennava.gov

Town of Vienna
Approved
06/09/2021

LEGEND

SURFACE LANDSCAPE AREA

PERMEABLE PAVEMENT AREA

50 0 25 50 100 200

1 INCH = 50'

IMPERVIOUS AREA COVERAGE

LOT AREA:		
MAX IMPERVIOUS SURFACE	85% OF LOT AREA*	
LOT AREA – MAX IMPERVIOUS SURFACE = MIN PERVIOUS SURFACE		
MIN PERVIOUS SURFACE	15% OF LOT AREA*	18,014 SF MIN.
–SURFACE LANDSCAPE		13,685 SF
–PERMEABLE PAVEMENT		4,742 SF
TOTAL PERVIOUS SURFACE	15.3% OF LOT AREA	18,427 SF
TOTAL IMPERVIOUS SURFACE	84.7% OF LOT AREA	101,664 SF

*INCENTIVES USED TO INCREASE MAX IMPERVIOUS COVER FROM 80% TO 85%

EXISTING IMPERVIOUS AREA = 100,766 SF (83.9%)

WALTER L. PHILLIPS INCORPORATED ESTABLISHED 1945
Engineers • Surveyors • Planners
Landscape Architects • Arborists
207 PARK AVENUE
FALLS CHURCH, VIRGINIA 22046
(703) 532-6163 Fax (703) 533-1301
www.WLPINC.com

CHECKED: KW
DRAWN: DL

DATE: SUB01: 9/13/2019, SUB02: 06/07/2020, SUB03: 4/19/2021
SUB04: 05/25/2021
SCALE: AS NOTED

COMMONWEALTH OF VIRGINIA
KAREN L. S. WHITE
Lic. No.041850
05/25/21
PROFESSIONAL ENGINEER

REVISION APPROVED BY

NO.	DESCRIPTION	DATE	REV. BY	APPROVED	DATE

ZONING TABULATIONS

444 MAPLE AVENUE WEST

SITE PLAN

TOWN OF VIENNA, VIRGINIA

SHEET: C-0201

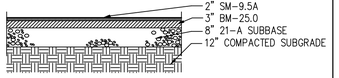

SUBGRADE TO BE COMPACTED TO MINIMUM 95% OF MAXIMUM THEORETICAL DENSITY AT ±2% OPTIMUM MOISTURE CONTENT AND IN ACCORDANCE WITH GEOTECHNICAL REQUIREMENTS.

1. PRIOR TO PLACEMENT OF PAVEMENT, GEOTECNICAL ENGINEER TO PERFROM CBR TESTS TO DETERMINE FINAL PAVEMENT SECTION.

ONSITE PAVEMENT SECTION

NOT TO SCALE

CG-6

NOTES:

1. THIS ITEM MAY BE PRECAST OR CAST IN PLACE.
2. CONCRETE TO BE CLASS A3 IF CAST IN PLACE, 4000 PSI IF PRECAST.
3. COMBINATION CURB & GUTTER HAVING A RADIUS OF 300 FEET OR LESS (ALONG FACE OF CURB) SHALL BE PAID FOR AS RADIAL COMBINATION CURB & GUTTER.
4. FOR USE WITH STABILIZED OPEN-GRADED DRAINAGE LAYER, THE BOTTOM OF THE CURB AND GUTTER SHALL BE CONSTRUCTED PARALLEL TO THE SLOPE OF SUBBASE COURSES AND TO THE DEPTH OF THE PAVEMENT.
5. ALLOWABLE CRITERIA FOR THE USE OF CG-6 IS BASED ON ROADWAY CLASSIFICATION AND DESIGN SPEED AS SHOWN IN APPENDIX A OF THE VDOT ROAD DESIGN MANUAL.

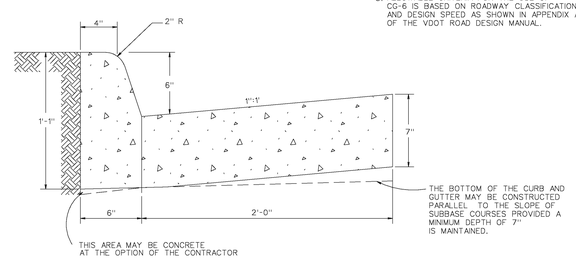

FOR MAPLE AVE AND NUTLEY ST

SPECIFICATION REFERENCE	COMBINATION 6" CURB & GUTTER	REV. 9/06
105 502	VIRGINIA DEPARTMENT OF TRANSPORTATION	201.03

CG-2

NOTES:

1. THIS ITEM MAY BE PRECAST OR CAST IN PLACE.
2. CONCRETE TO BE CLASS A3 IF CAST IN PLACE, 4000 PSI IF PRECAST.
3. CURB HAVING A RADIUS OF 300 FEET, OR LESS (ALONG FACE OF CURB) WILL BE PAID FOR AS RADIAL CURB.
4. THE DEPTH OF CURB MAY BE REDUCED AS MUCH AS 3" (15" DEPTH) OR INCREASED AS MUCH AS 3" (21" DEPTH) IN ORDER THAT THE BOTTOM OF CURB WILL COINCIDE WITH THE TOP OF A COURSE OF THE PAVEMENT SUBSTRUCTURE. OTHERWISE THE DEPTH IS TO BE 18" AS SHOWN. NO ADJUSTMENT IN THE PRICE BID IS TO BE MADE FOR A DECREASE OR AN INCREASE IN DEPTH.
5. CG-2 IS TO BE USED ON ROADWAYS MEETING THE REQUIREMENTS FOR CG-6 AS SHOWN IN APPENDIX A OF THE VDOT ROAD DESIGN MANUAL.

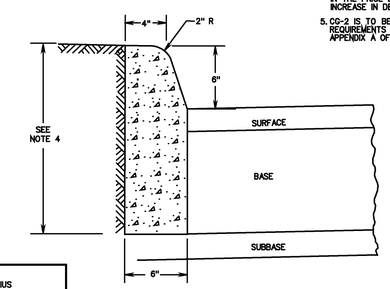

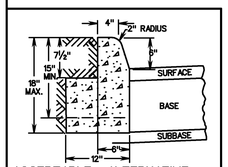

ACCEPTABLE ALTERNATIVE IF CURB IS EXTRUDED

SPECIFICATION REFERENCE	STANDARD 6" CURB	REV. 9/06
105 502	VIRGINIA DEPARTMENT OF TRANSPORTATION	201.01

FAIRFAX COUNTY PUBLIC FACILITIES MANUAL

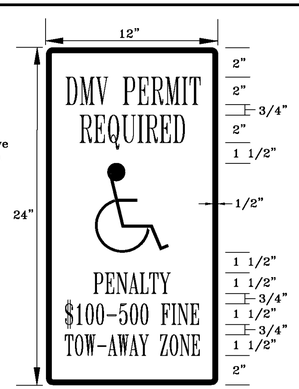

Note: Sign must have white lettering on a blue background.

Ref. Sec. 7-0602.4 Rev. 1-00, 2011 Reprint, 2018 Reprint	ACCESSIBLE PARKING SIGNS	PLATE NO.	STD. NO.
		30A-7	

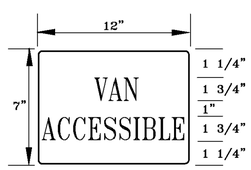

Note: Sign must have white lettering on a blue background.

Ref. Sec. 7-0602.4 Rev. 1-00, 2011 Reprint, 2018 Reprint	VAN ACCESSIBLE PARKING SIGNS	PLATE NO.	STD. NO.
		30B-7	

FAIRFAX COUNTY PUBLIC FACILITIES MANUAL

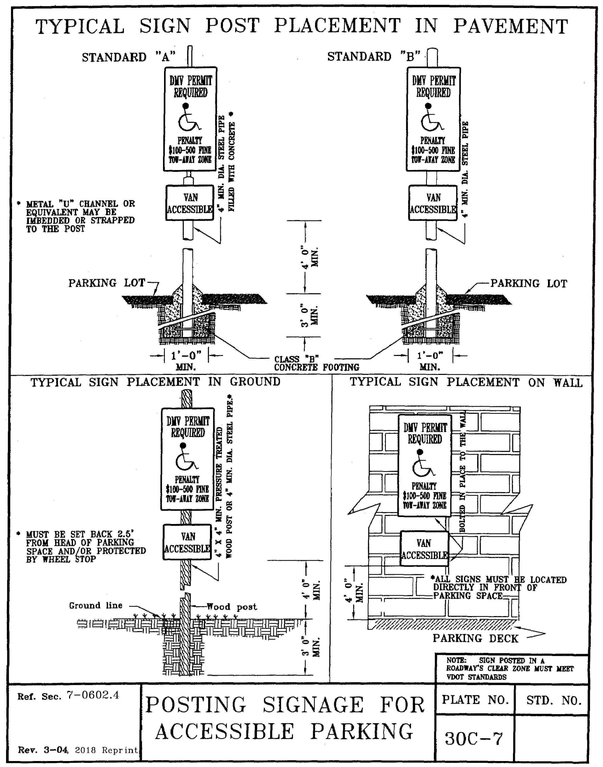

Ref. Sec. 7-0602.4 Rev. 3-04, 2018 Reprint	POSTING SIGNAGE FOR ACCESSIBLE PARKING	PLATE NO.	STD. NO.
		30C-7	

CG-6R

NOTES:

1. THIS ITEM MAY BE PRECAST OR CAST IN PLACE.
2. CONCRETE TO BE CLASS A3 IF CAST IN PLACE, 4000 PSI IF PRECAST.
3. COMB. CURB & GUTTER HAVING A RADIUS OF 300' OR LESS (ALONG FACE OF CURB) SHALL BE PAID FOR AS RADIAL COMBINATION CURB & GUTTER.
4. ALLOWABLE CRITERIA FOR THE USE OF CG-6 IS BASED ON ROADWAY CLASSIFICATION AND DESIGN SPEED ASSHOWN IN APPENDIX A OF THE VDOT ROAD DESIGN MANUAL.

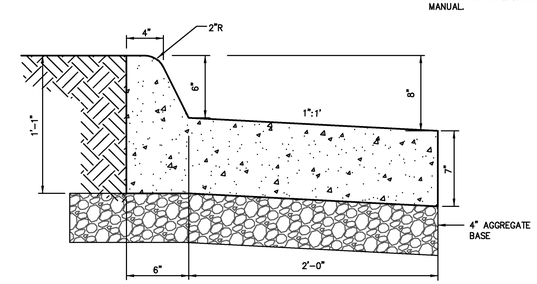

TYPICAL CG-6R 6" CURB & GUTTER (SPILL)

Town of Vienna
Approved
06/09/2021

NOTE:
ALL DETAILS PROVIDED ON THIS SHEET ARE CURRENT AT TIME OF PLAN PREPARATION. CONTRACTOR IS RESPONSIBLE FOR USING CURRENT DETAILS AT TIME OF CONSTRUCTION.

WALTER L. PHILLIPS INCORPORATED
ESTABLISHED 1945
Engineers • Surveyors • Planners
Landscape Architects • Arborists
207 PARK AVENUE
FALLS CHURCH, VIRGINIA 22046
(703) 532-6163 Fax (703) 533-1301
www.WLPINC.com

DATE: SUB01: 9/13/2019, SUB02: 06/07/2020, SUB03: 4/19/2021
SUB04: 05/25/2021
SCALE: NONE
DRAWN: DL
CHECKED: KW

COMMONWEALTH OF VIRGINIA
KAREN L. S. WHITE
Lic. No.041850
05/25/21
PROFESSIONAL ENGINEER

NO.	DESCRIPTION	DATE	REV. BY	APPROVED	DATE

REVISION APPROVED BY

DETAILS

444 MAPLE AVENUE WEST
SITE PLAN
TOWN OF VIENNA, VIRGINIA

SHEET: C-0202

"INVERTED U" BIKE RACK

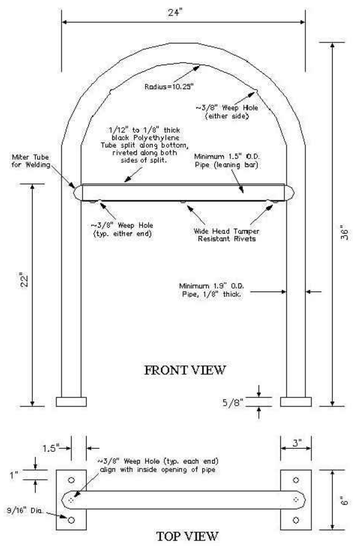

ACCESSIBILITY NOTES

1. ALL GRADES/SLOPES SHOWN ON THIS PLAN WERE DESIGNED AT OR BELOW MAXIMUMS ALLOWED BY ADA. IT IS THE CONTRACTOR'S RESPONSIBILITY TO FAMILIARIZE THEMSELVES WITH ADA ACCESSIBILITY GUIDELINES, AND OTHER APPLICABLE ACCESSIBILITY GUIDELINES. IN THE EVENT THAT A DESIGN QUESTION SHOULD ARISE, OR A FIELD CONDITION PRESENT ITSELF THAT IS DIFFERENT FROM THOSE SHOWN ON THESE PLANS, WORK SHOULD CEASE AND THE ENGINEER SHOULD BE NOTIFIED SO THAT AN ACCEPTABLE SOLUTION CAN BE DETERMINED.
2. THE CONTRACTOR IS ADVISED TO CAREFULLY CHECK ALL THE PHASES OR WORK RELATING TO ADA ACCESSIBILITY FOR THIS PROJECT. SINCE THE CODE DOES NOT ALLOW FOR CONSTRUCTION TOLERANCE, ANY CONSTRUCTION THAT EXCEEDS MAXIMUM OR MINIMUM DIMENSIONS AND SLOPES AS REQUIRED BY ANSI ARE SUBJECT TO REJECTION AND MAY BE REQUIRED TO BE REMOVED AND REPLACED AT THE CONTRACTOR'S EXPENSE.
3. SINCE THE CIVIL ENGINEER OR SURVEYOR CANNOT CONTROL THE EXACT METHODS OR MEANS USED BY THE GENERAL CONTRACTOR OR THEIR SUBCONTRACTORS DURING GRADING AND CONSTRUCTION OF THE PROJECT, THE CIVIL ENGINEER OR SURVEYOR ASSUMES NO RESPONSIBILITY FOR THE FINAL ACCEPTANCE OF ADA ACCESSIBILITY RELATED ITEMS (OR OTHER ACCESSIBILITY CODES) BY THE STATE AND COUNTY, ANY OTHER AUTHORITY, OR OTHER AFFECTED PARTIES.

FAIRFAX COUNTY PUBLIC FACILITIES MANUAL

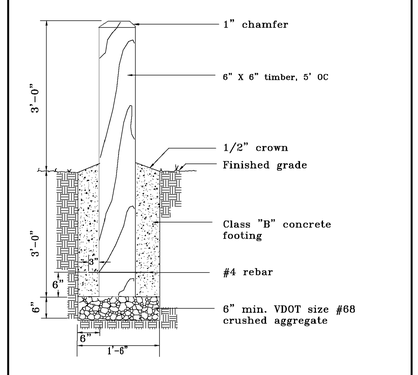

Ref. Sec. 8-0202.1B, 8-0203.1B, 8-0203.2E, 8-0203.2G Rev. 1-00, 2011 Reprint, 2018 Reprint	BOLLARD	PLATE NO. 9-8	STD. NO.

2016 ROAD & BRIDGE STANDARDS

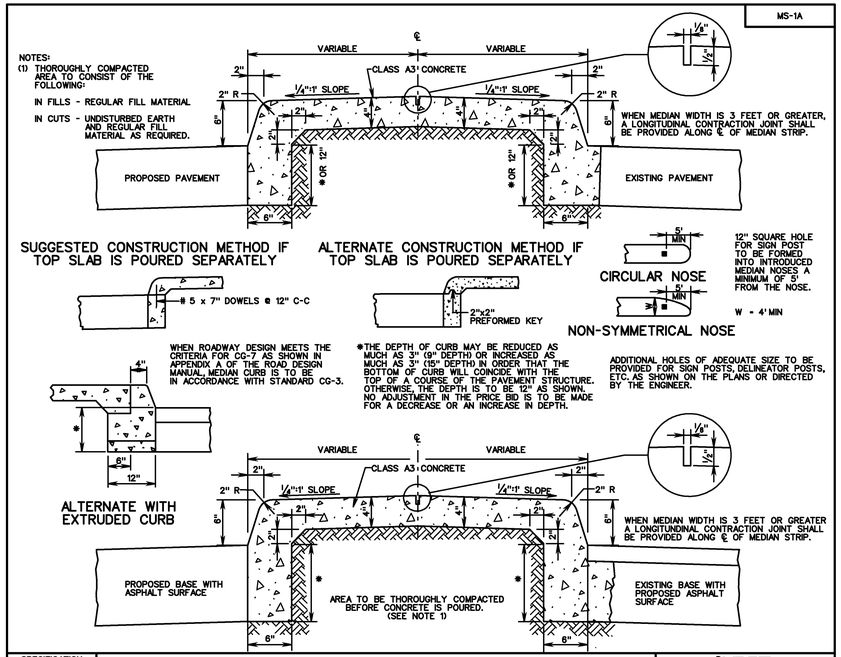

SPECIFICATION REFERENCE	STANDARD SOLID CONCRETE RAISED MEDIAN STRIP	VDOT ROAD AND BRIDGE STANDARDS	
502	VIRGINIA DEPARTMENT OF TRANSPORTATION	REVISION DATE	SHEET 1 OF 1 202.03

2016 ROAD & BRIDGE STANDARDS

2016 ROAD & BRIDGE STANDARDS

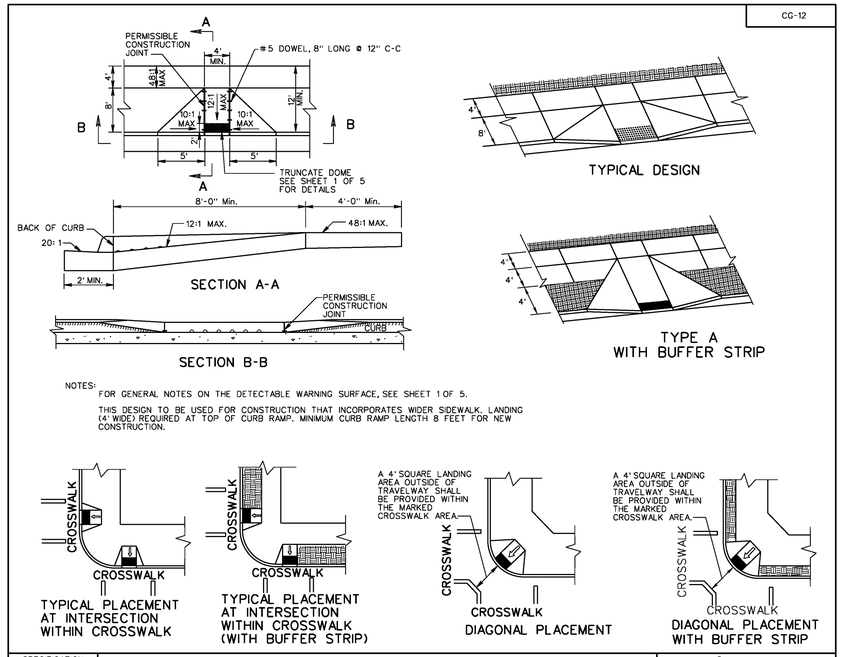

SPECIFICATION REFERENCE	CG-12 DETECTABLE WARNING SURFACE TYPE A (PERPENDICULAR) APPLICATION	VDOT ROAD AND BRIDGE STANDARDS	
105 502	VIRGINIA DEPARTMENT OF TRANSPORTATION	REVISION DATE 07/15	SHEET 2 OF 5 203.06

2016 ROAD & BRIDGE STANDARDS

2016 ROAD & BRIDGE STANDARDS

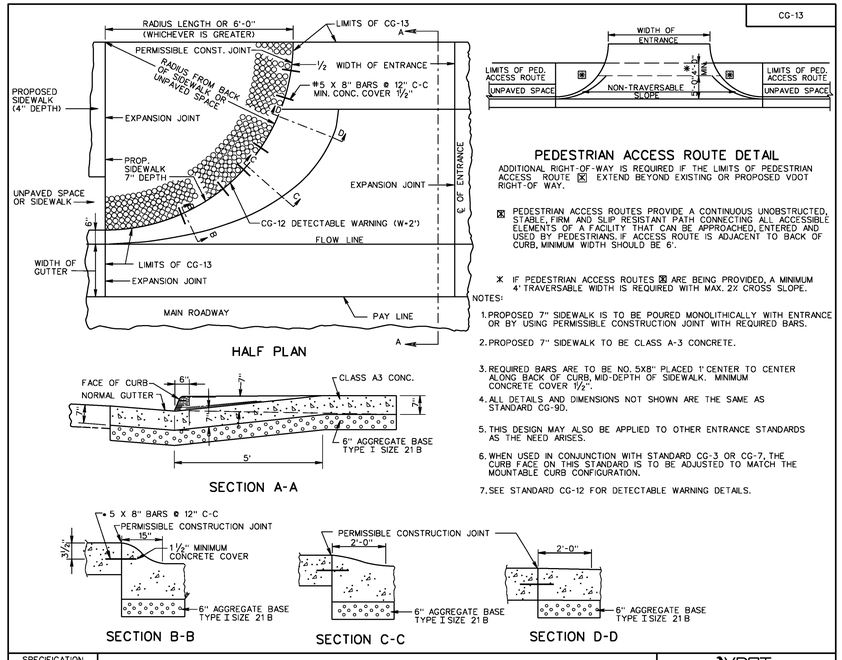

SPECIFICATION REFERENCE	COMMERCIAL ENTRANCE (HEAVY TRUCK TRAFFIC ANTICIPATED)	VDOT ROAD AND BRIDGE STANDARDS	
502	VIRGINIA DEPARTMENT OF TRANSPORTATION	REVISION DATE	SHEET 1 OF 1 203.10

2016 ROAD & BRIDGE STANDARDS

2016 ROAD & BRIDGE STANDARDS

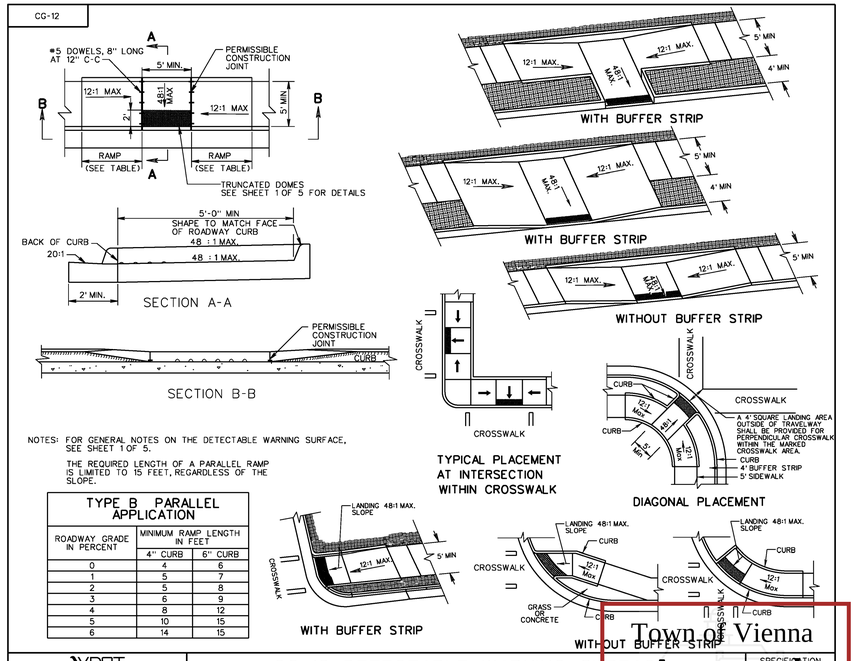

TYPE B PARALLEL APPLICATION

ROADWAY GRADE IN PERCENT	MINIMUM RAMP LENGTH IN FEET	
	4" CURB	6" CURB
0	4	6
1	5	7
2	5	8
3	6	9
4	8	12
5	10	15
6	14	15

VDOT ROAD AND BRIDGE STANDARDS	CG-12 DETECTABLE WARNING SURFACE TYPE B (PARALLEL) APPLICATION	SPECIFICATION REFERENCE
SHEET 3 OF 5 / 203.07 — REVISION DATE 07/16	VIRGINIA DEPARTMENT OF TRANSPORTATION	105 502

2016 ROAD & BRIDGE STANDARDS

Town of Vienna
Approved
06/09/2021

NOTE:
ALL DETAILS PROVIDED ON THIS SHEET ARE CURRENT AT TIME OF PLAN PREPARATION. CONTRACTOR IS RESPONSIBLE FOR USING CURRENT DETAILS AT TIME OF CONSTRUCTION.

Engineers • Surveyors • Planners
Landscape Architects • Arborists
207 PARK AVENUE
FALLS CHURCH, VIRGINIA 22046
(703) 532-6163 Fax (703) 533-1301
www.WLPINC.com
WALTER L. PHILLIPS INCORPORATED ESTABLISHED 1945

DRAWN: DJL
CHECKED: KW
DATE: SUB01: 9/13/2019, SUB02: 06/07/2020, SUB03: 4/19/2021
SUB04: 05/25/2021
SCALE: NONE

COMMONWEALTH OF VIRGINIA — KAREN L. S. WHITE Lic. No.041850 — 05/25/21 — PROFESSIONAL ENGINEER

NO.	DESCRIPTION	DATE	REV. BY	APPROVED	DATE

REVISION APPROVED BY

DETAILS

444 MAPLE AVENUE WEST
SITE PLAN
TOWN OF VIENNA, VIRGINIA

FIRE HYDRANT DETAILS

AMERICAN - DARLING
6 B84B-5 FIRE HYDRANT

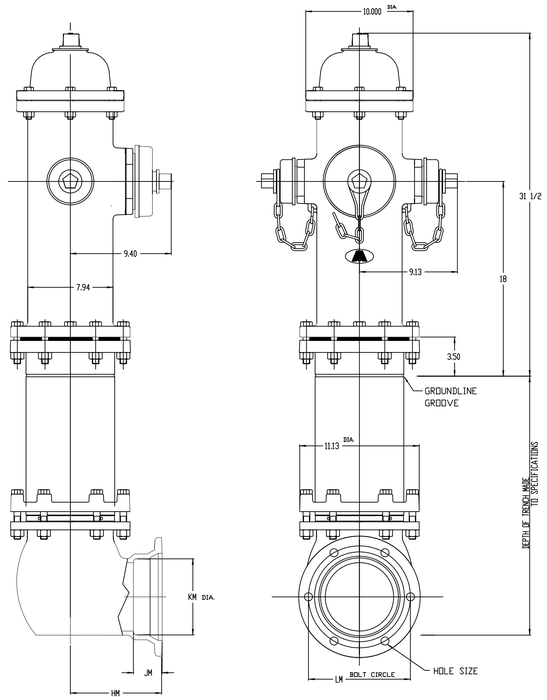

MECHANICAL JOINT BASE

SIZE	HM	JM	KM	LM	HOLES	
					NO.	SIZE
4	9.00	2.50	4.91	7.50	4	7/8
6	8.50	2.50	7.03	9.50	6	7/8
8	9.75	2.50	9.18	11.75	6	7/8

91-21306

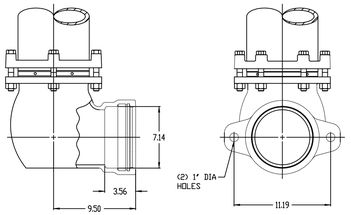

6" TYTON BASE WITH LUGS

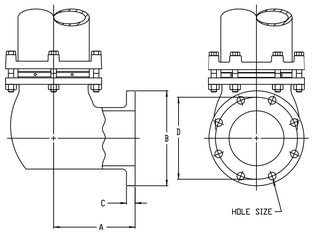

FLANGED BASE

SIZE	A	B	C	D	HOLES	
					NO.	SIZE
6	9.44	11.00	1.00	9.50	8	7/8
8	10.13	13.50	1.13	11.75	8	7/8

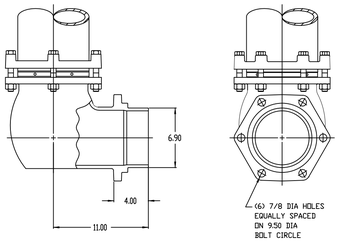

6" PLAIN END W/INTEGRAL MJ GLAND BASE

INDICATOR POST FLANGE

VALVE SIZE	A	B	END TO END FLANGE X FLANGE
3"	8.97	12.25	8.00
4"	10.38	13.91	9.00
6"	13.75	17.12	10.50
8"	16.94	20.47	11.50
10"	20.34	24.06	13.00
12"	23.78	27.59	14.00

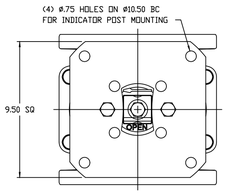

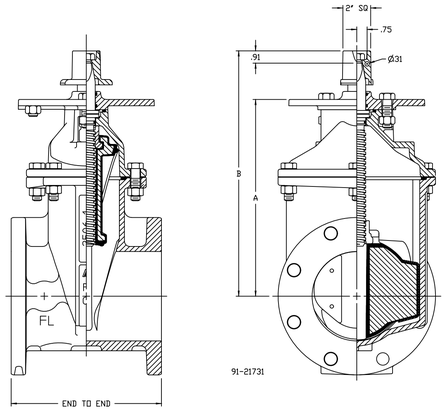

4"-12" AFC 2500-1 TAPPING VALVE

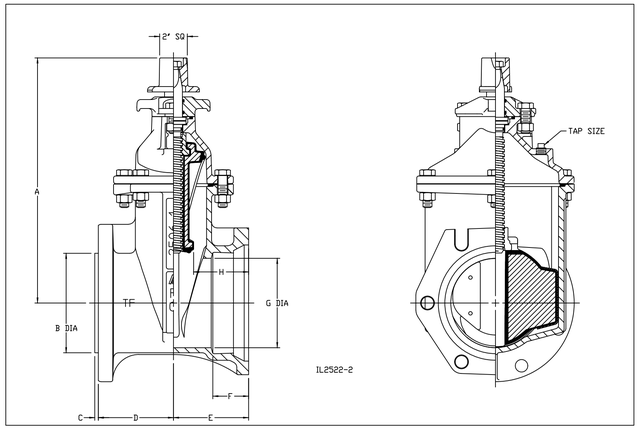

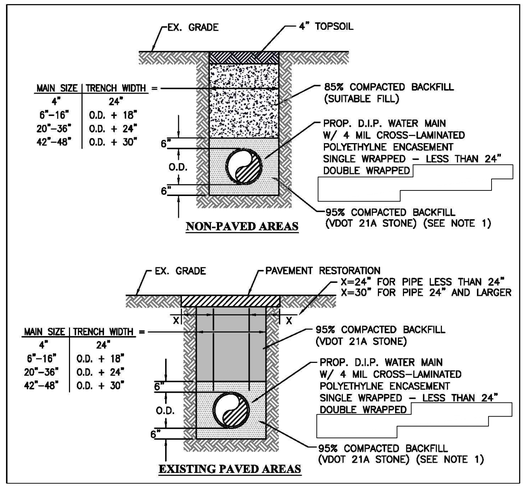

TRENCH - DUCTILE IRON PIPE

HYDRANT INSTALLATION

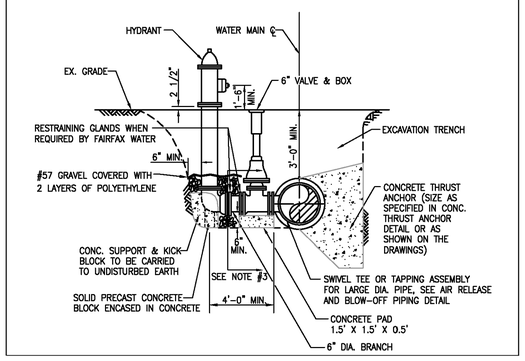

PIPE SIZE INCHES	DEGREE OF BEND (ø)	(1) WORKING PRESSURE 175 PSI		
		L	H	T
6	90	3.0	2.0	1.25
	45	2.0	1.5	1.0
	22.5	1.5	1.0	1.0
8	90	4.0	2.5	1.75
	45	2.5	2.0	1.0
	22.5	2.0	1.5	1.0
12	90	5.5	4.0	2.25
	45	4.0	3.0	1.5
	22.5	3.0	2.0	1.0
16	90	7.5	5.0	3.25
	45	5.0	4.5	2.0
	11.25/22.5	4.0	3.0	1.5
20	90	9.5	6.0	4.0
	45	7.0	4.5	2.75
	11.25/22.5	5.5	3.0	2.0
24	90	13.0	6.5	5.5
	45	9.0	5.0	3.5
	11.25/22.5	6.0	4.0	2.0

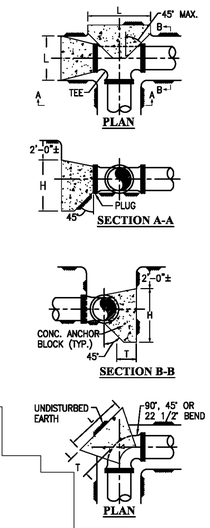

CONCRETE THRUST ANCHORS

VALVE BOX

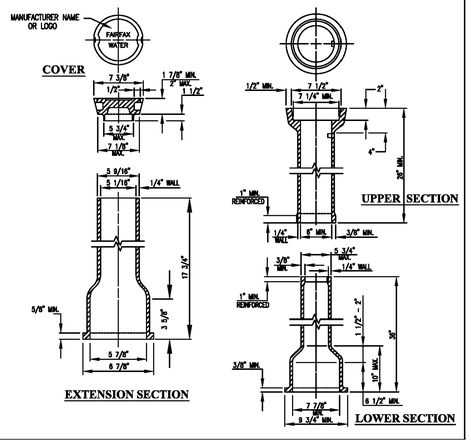

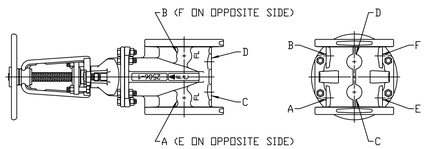

2"-12" ACF 2500 & 2500-1 OS&Y OPTIONAL TAPS

Town of Vienna
Approved
Date: 10/19/2021

NOTE:
PROPRIETARY MANUFACTURER DETAILS PROVIDED HERE ARE FOR PRELIMINARY INFORMATION ONLY. CONTRACTOR SHALL SELECT AND PROCURE ALL REQUIRED MATERIALS IN COMPLIANCE WITH VIENNA CONSTRUCTION STANDARDS

NOTE:
ALL WATER SYSTEMS MUST BE BUILT TO THE LATEST FAIRFAX WATER CONSTRUCTION PRACTICE MANUAL AND THE TOWN'S PUBLIC INFRASTRUCTURE MANUAL.

NOTE:
ALL DETAILS PROVIDED ON THIS SHEET ARE CURRENT AT TIME OF PLAN PREPARATION. CONTRACTOR IS RESPONSIBLE FOR USING CURRENT DETAILS AT TIME OF CONSTRUCTION.

WALTER L. PHILLIPS INCORPORATED
ESTABLISHED 1945
Engineers • Surveyors • Planners
Landscape Architects • Arborists
207 PARK AVENUE
FALLS CHURCH, VIRGINIA 22046
(703) 532-6163 Fax (703) 533-1301
www.WLPINC.com

DRAWN: DL
CHECKED: KW
DATE: SUB01: 9/13/2019, SUB02: 06/07/2020, SUB03: 4/19/2021
SCALE: NONE

COMMONWEALTH OF VIRGINIA
KAREN L. S. WHITE
Lic. No.041850
05/25/21
PROFESSIONAL ENGINEER

REVISION APPROVED BY

NO.	DESCRIPTION	DATE	REV. BY	APPROVED	DATE

DETAILS

444 MAPLE AVENUE WEST
SITE PLAN
TOWN OF VIENNA, VIRGINIA

SHEET: C-0204

2016 ROAD & BRIDGE STANDARDS

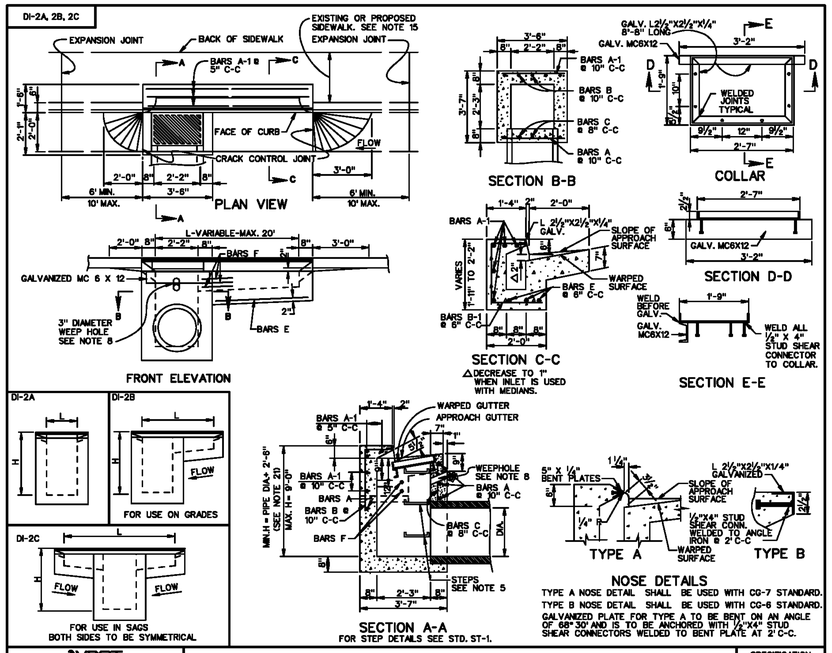

VDOT ROAD AND BRIDGE STANDARDS

SHEET 1 OF 2 | REVISION DATE | 104.03

STANDARD CURB DROP INLET

12" - 24" PIPE: MAXIMUM DEPTH (H) - 9'

VIRGINIA DEPARTMENT OF TRANSPORTATION

SPECIFICATION REFERENCE: 233, 302

2016 ROAD & BRIDGE STANDARDS

2016 ROAD & BRIDGE STANDARDS

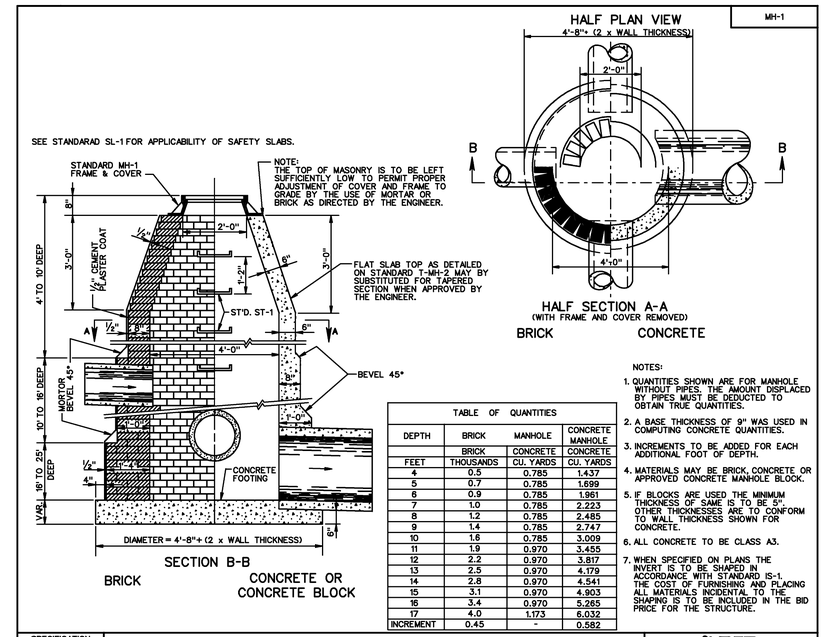

TABLE OF QUANTITIES

DEPTH	BRICK	MANHOLE	CONCRETE MANHOLE
	BRICK	CONCRETE	CONCRETE
FEET	THOUSANDS	CU. YARDS	CU. YARDS
4	0.5	0.785	1.437
5	0.7	0.785	1.699
6	0.9	0.785	1.961
7	1.0	0.785	2.223
8	1.2	0.785	2.485
9	1.4	0.785	2.747
10	1.6	0.785	3.009
11	1.9	0.970	3.455
12	2.2	0.970	3.817
13	2.5	0.970	4.179
14	2.8	0.970	4.541
15	3.1	0.970	4.903
16	3.4	0.970	5.265
17	4.0	1.173	6.032
INCREMENT	0.45	-	0.582

NOTES:

1. QUANTITIES SHOWN ARE FOR MANHOLE WITHOUT PIPES. THE AMOUNT DISPLACED BY PIPES MUST BE DEDUCTED TO OBTAIN TRUE QUANTITIES.
2. A BASE THICKNESS OF 9" WAS USED IN COMPUTING CONCRETE QUANTITIES.
3. INCREMENTS TO BE ADDED FOR EACH ADDITIONAL FOOT OF DEPTH.
4. MATERIALS MAY BE BRICK, CONCRETE OR APPROVED CONCRETE MANHOLE BLOCK.
5. IF BLOCKS ARE USED THE MINIMUM THICKNESS OF SAME IS TO BE 5". OTHER THICKNESSES ARE TO CONFORM TO WALL THICKNESS SHOWN FOR CONCRETE.
6. ALL CONCRETE TO BE CLASS A3.
7. WHEN SPECIFIED ON PLANS THE INVERT IS TO BE SHAPED IN ACCORDANCE WITH STANDARD IS-1. THE COST OF FURNISHING AND PLACING ALL MATERIALS INCIDENTAL TO THE SHAPING IS TO BE INCLUDED IN THE BID PRICE FOR THE STRUCTURE.

SPECIFICATION REFERENCE: 302

MANHOLE FOR 12" - 48" PIPE CULVERTS

VIRGINIA DEPARTMENT OF TRANSPORTATION

VDOT ROAD AND BRIDGE STANDARDS

REVISION DATE | SHEET 1 OF 5 | 106.01

2016 ROAD & BRIDGE STANDARDS

2016 ROAD & BRIDGE STANDARDS

TABLE OF QUANTITIES — DI-2A, 2B, 2C

TYPE	L	REINFORCING STEEL																	
		CONCRETE	BARS A		BARS A-1		BARS B		BARS B-1		BARS C		BARS E		BARS F		WEIGHT
	Ft.	Cu. Yds.	No.	Lin. Ft. *	No.	Lin. Ft. *	No.	Lin. Ft.*	No.	Lin. Ft. *	No.	Lin. Ft.*	No.	Lin. Ft.*	No.	Lin. Ft.*	Lbs.
DI-2A	2'-2"	1.71	4	3'-2"	5	3'-2"	4	3'-6"	-	–	5	2'-0"	-	-	-	1'-6"	55
DI-2B	4'	1.95	4	3'-2"	5	5'-0"	4	3'-6"	3	4'-3" to 4'-6"	5	2'-0"	3	2'-0"	3	1'-6"	84
	6'	2.23	4	3'-2"	5	7'-0"	4	3'-6"	7	4'-3" to 4'-6"	5	2'-0"	3	4'-0"	3	1'-6"	119
	8'	2.51	4	3'-2"	5	9'-0"	4	3'-6"	11	4'-3" to 4'-6"	5	2'-0"	3	6'-0"	3	1'-6"	154
	10'	2.79	4	3'-2"	5	11'-0"	4	3'-6"	15	4'-3" to 4'-6"	5	2'-0"	3	8'-0"	3	1'-6"	189
	12'	3.05	4	3'-2"	5	13'-0"	4	3'-6"	19	4'-3" to 4'-6"	5	2'-0"	3	10'-0"	3	1'-6"	224
	14'	3.34	4	3'-2"	5	15'-0"	4	3'-6"	23	4'-3" to 4'-6"	5	2'-0"	3	12'-0"	3	1'-6"	259
	16'	3.61	4	3'-2"	5	17'-0"	4	3'-6"	27	4'-3" to 4'-6"	5	2'-0"	3	14'-0"	3	1'-6"	294
	18'	3.89	4	3'-2"	5	19'-0"	4	3'-6"	31	4'-3" to 4'-6"	5	2'-0"	3	16'-0"	3	1'-6"	329
	20'	4.17	4	3'-2"	5	21'-0"	4	3'-6"	35	4'-3" to 4'-6"	5	2'-0"	3	18'-0"	3	1'-6"	364
DI-2C	6'	2.24	4	3'-2"	5	7'-0"	4	3'-6"	6	4'-3" to 4'-6"	5	2'-0"	6	2'-1"	6	1'-6"	115
	8'	2.55	4	3'-2"	5	9'-0"	4	3'-6"	10	4'-3" to 4'-6"	5	2'-0"	6	3'-1"	6	1'-6"	150
	10'	2.82	4	3'-2"	5	11'-0"	4	3'-6"	14	4'-3" to 4'-6"	5	2'-0"	6	4'-1"	6	1'-6"	185
	12'	3.09	4	3'-2"	5	13'-0"	4	3'-6"	18	4'-3" to 4'-6"	5	2'-0"	6	5'-1"	6	1'-6"	220
	14'	3.37	4	3'-2"	5	15'-0"	4	3'-6"	22	4'-3" to 4'-6"	5	2'-0"	6	6'-1"	6	1'-6"	255
	16'	3.65	4	3'-2"	5	17'-0"	4	3'-6"	26	4'-3" to 4'-6"	5	2'-0"	6	7'-1"	6	1'-6"	290
	18'	3.93	4	3'-2"	5	19'-0"	4	3'-6"	30	4'-3" to 4'-6"	5	2'-0"	6	8'-1"	6	1'-6"	325
	20'	4.20	4	3'-2"	5	21'-0"	4	3'-6"	34	4'-3" to 4'-6"	5	2'-0"	6	9'-1"	6	1'-6"	360

NOTES

1. DEPTH OF INLET (H) TO BE SHOWN ON PLANS.
2. THE "H" DIMENSION SHOWN ON THE STANDARDS AND SPECIFIED ON THE PLANS WILL BE MEASURED FROM THE INVERT OF THE OUTFALL PIPE TO THE TOP OF THE STRUCTURE. PLAN "H" DIMENSIONS ARE APPROXIMATE ONLY FOR ESTIMATING PURPOSES AND THE ACTUAL DIMENSIONS SHALL BE DETERMINED BY THE CONTRACTOR FROM FIELD CONDITIONS.
3. WHEN SPECIFIED ON THE PLANS THE INVERT IS TO BE SHAPED IN ACCORDANCE WITH STANDARD IS-1. THE COST OF FURNISHING AND PLACING ALL MATERIALS INCIDENTAL TO THE SHAPING IS TO BE INCLUDED IN THE BID PRICE FOR THE STRUCTURE.
4. IN THE EVENT THE INVERT OF THE OUTFALL PIPE IS HIGHER THAN THE BOTTOM OF THE STRUCTURE, THE INVERT OF THE STRUCTURE SHALL BE SHAPED WITH CEMENT MORTAR TO PREVENT STANDING OR PONDING OF WATER IN THE STRUCTURE. THE COST OF FURNISHING AND PLACING ALL MATERIALS INCIDENTAL TO THE SHAPING IS TO BE INCLUDED IN THE BID PRICE FOR THE STRUCTURE.
5. STEPS ARE TO BE PROVIDED WHEN H IS 4'-0" OR GREATER. FOR DETAILS SEE STANDARD ST-1. THIS ITEM MAY BE PRECAST OR CAST-IN-PLACE.
6. #4 X 8" SMOOTH DOWELS AT APPROXIMATELY 12" C-C TO BE PLACED IN ALL AREAS ADJACENT
7. TO ABUTTING CONCRETE TO PREVENT SETTLEMENT.
8. 3" DIAMETER WEEP HOLE TO BE LOCATED TO DRAIN SUBBASE MATERIAL. WEEP HOLE WITH 12"X12" PLASTIC HARDWARE CLOTH ¼" MESH OR GALVANIZED STEEL WIRE, MINIMUM WIRE DIAMETER 0.03", NUMBER 4 MESH HARDWARE CLOTH ANCHORED FIRMLY TO THE OUTSIDE OF THE STRUCTURE.
9. ALL REINFORCING STEEL SHALL HAVE A MINIMUM COVER OF 2".
10. ALL REINFORCING STEEL TO BE CUT CLEAR OF ALL OPENINGS BY 2".
11. CAST-IN PLACE CONCRETE IS TO BE CLASS A3 (3000 PSI). PRECAST CONCRETE IS TO BE 4000 PSI.
12. LENGTH OF SLOT (L) WILL, IN EVERY CASE, BE SHOWN ON PLANS.
13. THIS STANDARD IS INTENDED FOR USE IN CURB AND GUTTER SITUATIONS ONLY.
14. STANDARD INLETS MAY BE CONSTRUCTED WITH CONCRETE BLOCKS IN ACCORDANCE WITH THE DETAILS SHOWN ON STANDARD DRAWING DI-MB.
15. THIS AREA MAY BE EARTHEN, IN WHICH CASE THE EXPANSION JOINTS WILL APPLY ONLY TO CURB AND GUTTER.
16. CONCRETE QUANTITIES SHOWN ARE FOR DEPTH (H) OF 9'-2" WITHOUT PIPES. THE AMOUNT DISPLACED BY PIPES MUST BE DEDUCTED TO OBTAIN TRU QUANTITIES. FOR INLETS OF DIFFERENT DEPTHS ADD OR SUBTRACT 0.28 CUBIC YARDS OF CONCRETE FOR EACH FOOT.
17. LENGTH OF ANGLE IRON AS SHOWN ON SHEET 1 OF 2 IS TO BE L 16" AT 4.10 LBS./FT.
18. * DENOTES LENGTH OF ONE (1) BAR.
19. ALL REINFORCING BARS TO BE #5.
20. GRATE TO BE INSTALLED SO SLOTS WILL DIRECT WATER TOWARD THE INLET THROAT.
21. MINIMUM HEIGHT = PIPE DIA.+ 2'-6" WHEN PIPES ARE LOCATED UNDER EXTENDED SLOT OF INLET.
22. DUMP NO WASTE DRAINS TO WATERWAYS LETTERING IS REQUIRED ON ALL DI-2 GRATES. LOCATION OF LETTERING MAY VARY BY MANUFACTURER.

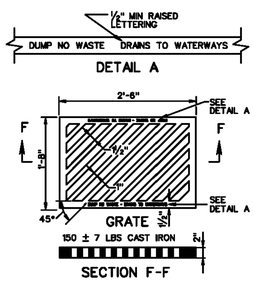

SPECIFICATION REFERENCE: 233, 302

STANDARD CURB DROP INLET

12" - 24" PIPE: MAXIMUM DEPTH (H)-9'

VIRGINIA DEPARTMENT OF TRANSPORTATION

VDOT ROAD AND BRIDGE STANDARDS

REVISION DATE | SHEET 2 OF 2 | 104.04

2016 ROAD & BRIDGE STANDARDS

FAIRFAX COUNTY PUBLIC FACILITIES MANUAL

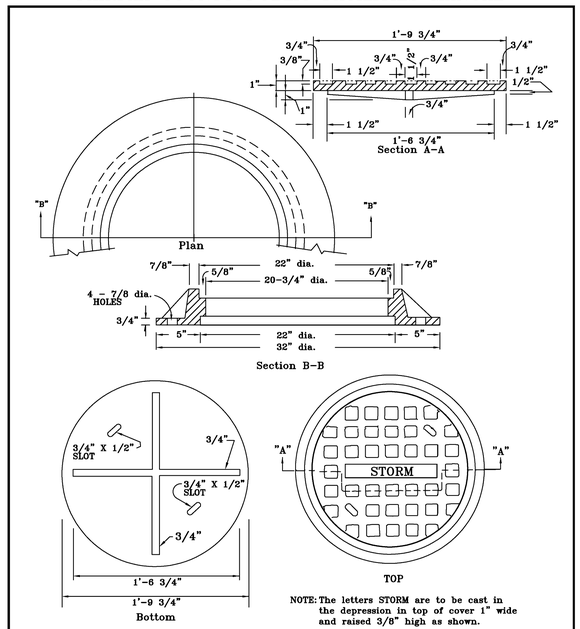

Ref. Sec. 6-1104.2

Rev. 1-00, 11-05, 2011 Reprint, 2018 Reprint

STANDARD MANHOLE COVER & FRAME FOR USE IN EASEMENTS OUTSIDE OF VDOT RIGHT-OF-WAY

PLATE NO.	STD. NO.
23-6	MH-1

Town of Vienna
Approved
06/09/2021

NOTE:
ALL DETAILS PROVIDED ON THIS SHEET ARE CURRENT AT TIME OF PLAN PREPARATION. CONTRACTOR IS RESPONSIBLE FOR USING CURRENT DETAILS AT TIME OF CONSTRUCTION.

WALTER L. PHILLIPS INCORPORATED
ESTABLISHED 1945
Engineers • Surveyors • Planners
Landscape Architects • Arborists
207 PARK AVENUE
FALLS CHURCH, VIRGINIA 22046
(703) 532-6163 Fax (703) 533-1301
www.WLPINC.com

DATE: SUB01: 9/13/2019, SUB02: 05/07/2020, SUB03: 4/19/2021, SUB04: 05/25/2021
SCALE: NONE
DRAWN: DL
CHECKED: KW

COMMONWEALTH OF VIRGINIA — KAREN L. S. WHITE Lic. No.041850 — 05/25/21 — PROFESSIONAL ENGINEER

REVISION APPROVED BY

NO.	DESCRIPTION	DATE	REV. BY	APPROVED	DATE

DETAILS

444 MAPLE AVENUE WEST

SITE PLAN

TOWN OF VIENNA, VIRGINIA

SHEET: C-0205

2016 ROAD & BRIDGE STANDARDS

JB-1

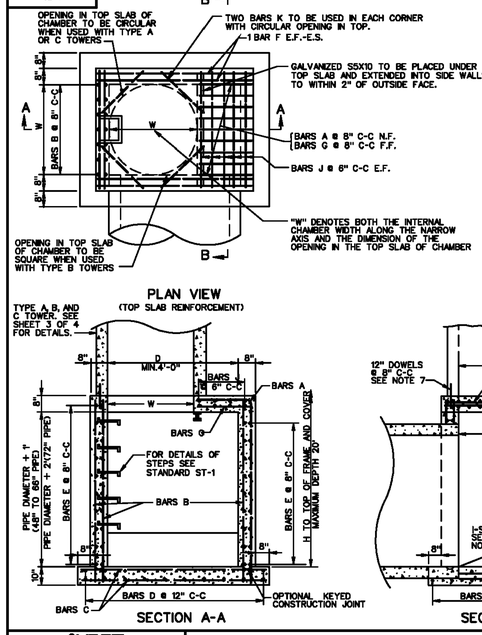

NOTES:

1. ALL REINFORCING STEEL TO BE #6 BARS WITH A MINIMUM 1½" CONCRETE COVER.
2. ANY REINFORCING BARS IN CONFLICT WITH PIPE SHELLS ARE TO BE CUT A MINIMUM OF 1½" FROM PIPE.
3. FOR DETAILS METHOD OF TURNING ANGLES AND APPROXIMATE QUANTITIES SEE SHEET 2 OF 4.
4. PRECAST CHAMBERS OF THE BOLT TOGETHER TYPE MAY BE SUBSTITUTED WHEN APPROVED ON AN INDIVIDUAL BASIS.
5. ALL CONCRETE TO BE CLASS A3 IF CAST IN PLACE, 4000 PSI IF PRECAST.
6. THIS ITEM MAY BE PRECAST OR CAST IN PLACE.
7. ELIMINATE DOWELS WHEN PRECAST TYPE A TOWER ARE ELECTED.
8. WHEN SPECIFIED ON PLANS INVERT IS TO BE SHAPED IN ACCORDANCE WITH STANDARD IS-1. THE MATERIALS INCIDENTAL TO THE SHAPING ARE NOT TO BE MEASURED OR PAID SEPARATELY BUT THE COST OF SAME IS TO BE INCLUDED IN THE PRICE BID PER CUBIC YARD OF JUNCTION BOX CONCRETE

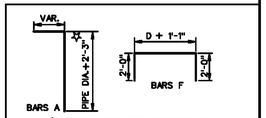

☆INCREASE INDICATED DIMENSION BY 1' FOR USE WITH 72" PIPE.

THE LENGTH OF ALL BARS AND THE NUMBER REQUIRED WILL VARY WITH THE SIZE OF CHAMBER. FOR APPROXIMATE WEIGHT SEE SHEET 2 AND 4 OF THIS STANDARD.

BARS B, C, E, G, H, AND J ARE STRAIGHT.

VDOT ROAD AND BRIDGE STANDARDS

SHEET 1 OF 4 | REVISION DATE | 106.10

JUNCTION BOX CHAMBER DETAILS FOR 48" - 72" PIPE CULVERTS MAX. DEPTH (H) = 20'

VIRGINIA DEPARTMENT OF TRANSPORTATION

SPECIFICATION REFERENCE: 105, 233, 302

2016 ROAD & BRIDGE STANDARDS

2016 ROAD & BRIDGE STANDARDS

JB-1

LOCATION OF CHAMBER TO FIT VARIOUS FLOW LINE ANGLES

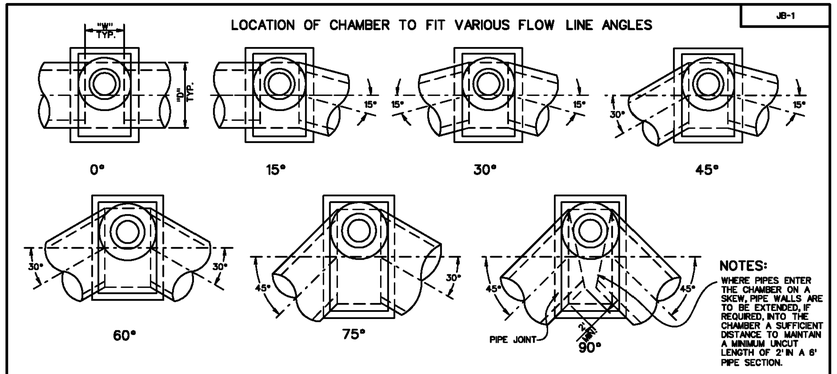

NOTES:

WHERE PIPES ENTER THE CHAMBER ON A SKEW, PIPE WALLS ARE TO BE EXTENDED, IF REQUIRED, INTO THE CHAMBER A SUFFICIENT DISTANCE TO MAINTAIN A MINIMUM UNCUT LENGTH OF 2' IN A 8' PIPE SECTION.

QUANTITIES FOR CHAMBER *

ANGLE OF TURN

	PIPE SIZE	0°			1° - 30°			31° - 60°			61° - 90°		
		DIM. D	CU. YDS. CONC.	LBS. REINF STEEL	DIM. D	CU. YDS. CONC.	LBS. REINF. STEEL	DIM. D	CU. YDS. CONC.	LBS. REINF. STEEL	DIM. D	CU. YDS. CONC.	LBS. REINF. STEEL
TYPE A "W" = 4'-0"	48"	4'-10"	4.56	1293	5'-0"	4.65	1317	5'-7"	4.99	1412	6'-10"	5.72	1602
	54"	5'-5"	5.16	1466	5'-7"	5.26	1558	6'-3"	5.10	1617	7'-8"	6.53	1798
	60"	6'-0"	5.80	1657	6'-3"	5.96	1794	6'-11"	6.38	1831	8'-8"	7.38	2064
	66"	6'-7"	6.46	2028	6'-10"	6.63	2069	7'-7"	7.12	2220	9'-4"	8.27	2510
	72"	7'-2"	7.77	2248	7'-5"	7.95	2306	8'-3"	8.56	2490	10'-2"	9.97	2843
TYPE B "W" = 3'-0"	48"	4'-10"	4.06	1149	5'-0"	4.15	1173	5'-7"	4.46	1274	6'-10"	5.12	1440
	54"	5'-5"	4.61	1308	5'-7"	4.70	1373	6'-3"	5.07	1452	7'-8"	5.85	1619
	60"	6'-0"	5.19	1487	6'-3"	5.33	1531	6'-11"	5.71	1651	8'-8"	6.63	1925
	66"	6'-7"	5.79	1815	6'-10"	5.94	1934	7'-7"	6.40	2058	9'-4"	7.45	2359
	72"	7'-2"	7.00	2020	7'-5"	7.17	2086	8'-3"	7.73	2264	10'-2"	9.03	2585
TYPE C "W" = 2'-0"	48"	4'-10"	3.53	1030	5'-0"	3.61	1052	5'-7"	3.88	1133	6'-10"	4.47	1294
	54"	5'-5"	4.02	1177	5'-7"	4.10	1236	6'-3"	4.43	1305	7'-8"	5.14	1454
	60"	6'-0"	4.54	1337	6'-3"	4.67	1381	6'-11"	5.02	1484	8'-8"	5.85	1710
	66"	6'-7"	5.09	1592	6'-10"	5.22	1674	7'-7"	5.64	1789	9'-4"	6.59	2062
	72"	7'-2"	6.19	1835	7'-5"	6.34	1885	8'-3"	6.86	2050	10'-2"	8.05	2355

* QUANTITIES SHOWN ARE FOR CHAMBER WITHOUT PIPES. PIPE DISPLACEMENT OF CONCRETE AND STEEL MUST BE DEDUCTED TO OBTAIN TRUE QUANTITIES.

CHAMBER AND TOWER QUANTITIES FOR CONCRETE AND REINFORCING STEEL MUST BE ADDED TO OBTAIN TOTALS.

"W"	STRUCT. STEEL
2'-0"	30 Lbs.
3'-0"	40 Lbs.
4'-0"	50 Lbs.

SPECIFICATION REFERENCE: 105, 233, 302

JUNCTION BOX DETAILS FOR ANGULAR CONNECTIONS OF 48" - 72" PIPE CULVERTS

VIRGINIA DEPARTMENT OF TRANSPORTATION

VDOT ROAD AND BRIDGE STANDARDS

REVISION DATE | SHEET 2 OF 4 | 106.11

2016 ROAD & BRIDGE STANDARDS

2016 ROAD & BRIDGE STANDARDS

PC-1

POLYETHYLENE CORRUGATED PIPE (PE)

DIAMETER INCHES	AREA SQ. FT.	MAXIMUM HEIGHT OF COVER FEET TYPE C	TYPE S
12	0.8	23	20
15	1.2	23	19
18	1.8	19	19
24	3.1	16	15
30	4.9	—	13
36	7.1	—	12
42	9.6	—	10
48	12.6	—	10
54	15.9	—	10
60	19.6	—	10

POLYVINYLCHLORIDE PROFILE WALL PIPE (PVC)

DIAMETER INCHES	AREA SQ. FT.	MAXIMUM HEIGHT OF COVER FEET
18	1.7	41
21	2.3	40
24	3.0	37
30	4.7	34
36	6.9	34

POLYPROPYLENE PIPE (PP)

DIAMETER INCHES	AREA SQ. FT.	MAXIMUM HEIGHT OF COVER FEET TYPE S	TYPE D
12	0.8	25	—
15	1.2	24	—
18	1.8	24	—
24	3.1	20	—
30	4.9	16	—
36	7.1	14	16
42	9.6	14	16
48	12.6	13	16
60	19.6	12	15

NOTES:

1. COVER HEIGHTS INDICATED IN TABLES ARE FOR FINISHED CONSTRUCTION, USING AASHTO LRFD BRIDGE DESIGN SPECIFICATIONS.
2. TO PROTECT PIPE DURING CONSTRUCTION, MINIMUM HEIGHT OF COVER TO BE IN ACCORDANCE WITH TABLE A PRIOR TO ALLOWING CONSTRUCTION TRAFFIC TO CROSS INSTALLATION. THE COVER SHALL EXTEND THE FULL LENGTH OF THE PIPE. THE APPROACH FILL IS TO EXTEND A MINIMUM OF 10(DIAMETER + ½ DIAMETER) ON EACH SIDE OF THE PIPE OR TO THE INTERSECTION WITH A CUT.
3. STANDARD MINIMUM FINISHED HEIGHT OF COVER FOR ALL PIPES, EXCEPT THOSE UNDER ENTRANCES, SHALL BE 2.0' OR ½ DIAMETER WHICHEVER IS GREATER. FOR 12" THROUGH 48" DIAMETER PIPE INSTALLATIONS WHERE THE COVER HEIGHTS CANNOT BE ACHIEVED, AN ABSOLUTE MINIMUM FINISHED COVER HEIGHT OF 1.0' WILL BE ALLOWED ONLY IF ALL POSSIBLE MEANS TO OBTAIN THE STANDARD VALUE HAVE BEEN EXHAUSTED. THE MINIMUM FINISHED HEIGHT OF COVER FOR PIPES UNDER ENTRANCES IS 9" FOR PIPE DIAMETERS LESS THAN OR EQUAL TO 24", AND 12" FOR PIPE DIAMETERS GREATER THAN 24". WHERE THE SURFACE OVER THE TOP OF THE PIPE WILL BE ASPHALT, A MINIMUM OF 6" OF CLASS I BACKFILL MATERIAL IS TO BE PLACED BETWEEN THE TOP OF THE PIPE AND THE BOTTOM OF THE ASPHALT.
4. SEE STANDARD PB-1 FOR PIPE BEDDING AND BACKFILL REQUIREMENTS.
5. LARGE CULVERTS SHALL BE DESIGNED BY AN ENGINEER, REGISTERED IN THE COMMONWEALTH OF VIRGINIA AND SHALL BE DESIGNED IN ACCORDANCE WITH THE REQUIREMENTS OF VOLUME V, PART 2 OF THE MANUAL OF THE STRUCTURE AND BRIDGE DIVISION. A LARGE CULVERT IS ANY CULVERT THAT WILL BECOME PART OF THE STRUCTURE AND BRIDGE INVENTORY. THE GEOMETRIC DEFINITION OF THESE STRUCTURES IS PROVIDED IN THE CURRENT VERSION OF VDOT'S IM-S&B-27.

PIPE TYPE DEFINITIONS:

TYPE C - SINGLE WALL PIPE (CORRUGATED WALL ONLY)

TYPE S - DOUBLE WALL PIPE (CORRUGATED WALL WITH SMOOTH INNER WALL)

TYPE D - TRIPLE WALL PIPE (CORRUGATED WALL BETWEEN SMOOTH INNER AND OUTER WALL)

TABLE A

PIPE DIAMETER	MINIMUM COVER HEIGHT DURING CONSTRUCTION (SEE NOTE 2)
12" TO 30"	18"
36" AND ABOVE	½ DIAMETER

VDOT ROAD AND BRIDGE STANDARDS

SHEET 15 OF 18 | REVISION DATE 04/19 | 107.19

A COPY OF THE ORIGINAL SEALED AND SIGNED STANDARD DRAWING IS ON FILE IN THE CENTRAL OFFICE

PLASTIC PIPE HEIGHT OF COVER TABLES FOR HL-93 LIVE LOAD

VIRGINIA DEPARTMENT OF TRANSPORTATION

SPECIFICATION REFERENCE: 232, 302

2016 ROAD & BRIDGE STANDARDS

Town of Vienna
Approved
06/09/2021

NOTE:
ALL DETAILS PROVIDED ON THIS SHEET ARE CURRENT AT TIME OF PLAN PREPARATION. CONTRACTOR IS RESPONSIBLE FOR USING CURRENT DETAILS AT TIME OF CONSTRUCTION.

DETAILS

444 MAPLE AVENUE WEST

SITE PLAN

TOWN OF VIENNA, VIRGINIA

WALTER L. PHILLIPS INCORPORATED ESTABLISHED 1945
Engineers • Surveyors • Planners
Landscape Architects • Arborists
207 PARK AVENUE
FALLS CHURCH, VIRGINIA 22046
(703) 532-6163 Fax (703) 533-1301
www.WLPINC.com

DATE: SUB01: 9/13/2019, SUB02: 06/07/2020, SUB03: 4/19/2021, SUB04: 05/25/2021

SCALE: NONE | DRAWN: DJL | CHECKED: KW

KAREN L. S. WHITE Lic. No.041850 05/25/21 COMMONWEALTH OF VIRGINIA PROFESSIONAL ENGINEER

REVISION APPROVED BY

NO.	DESCRIPTION	DATE	REV. BY	APPROVED	DATE

SHEET: C-0206

TECHNICAL NOTE

Minimum and Maximum Cover Heights for HP Storm Pipe for Storm Drainage

TN 2.04
March 2018

Introduction

The information in this document is designed to provide answers to general cover height questions; the data provided is not intended to be used for project design. The design procedure described in the *Structures* section (Section 2) of the Drainage Handbook provides detailed information for analyzing most common installation conditions. This procedure should be utilized for project specific designs.

The two common cover height concerns are minimum cover in areas exposed to vehicular traffic and maximum cover heights. Either may be considered "worst case" scenario from a loading perspective, depending on the project conditions.

Minimum Cover in Traffic Applications

Pipe diameters from 12- through 48-inch (300-1200 mm) installed in traffic areas (AASHTO H-20, H-25, or HL-93 loads) must have at least one foot (0.3m) of cover over the pipe crown, while 60-inch (1500 mm) pipes must have at least 24 inches (0.6m) of cover. The backfill envelope must be constructed in accordance with the *Installation* section (Section 5) of the Drainage Handbook and the requirements of ASTM D2321. The backfill envelope must be of the type and compaction listed in Appendix A-5, Table A-5.2 of the Drainage Handbook. In Table 1 below, this condition is represented by a Class III material compacted to 95% standard Proctor density or a Class II material compacted to 90% standard proctor density, although other material can provide similar strength at slightly lower levels of compaction. Structural backfill material should extend to the crown of the pipe; the remaining cover should be appropriate for the installation and as specified by the design engineer. If settlement or rutting is a concern, it may be appropriate to extend the structural backfill to grade. Where pavement is involved, sub-base material can be considered in the minimum burial depth. While rigid pavements can be included in the minimum cover, the thickness of flexible pavements should not be included in the minimum cover.

Additional information that may affect the cover requirements is included in the *Installation* section (Section 5) of the Drainage Handbook. Some examples of what may need to be considered are temporary heavy equipment, construction loading , paving equipment and similar loads that are less than the design load, the potential of pipe flotation, and the type of surface treatment which will be installed over the pipe zone.

Table 1
Minimum Cover Requirements for ADS HP Storm with AASHTO H-25, H-20, or HL-93 Load

Inside Diameter, ID, in.(mm)	Minimum Cover ft. (m)	Inside Diameter, ID, in.(mm)	Minimum Cover ft. (m)
12 (300)	1 (0.3)	36 (900)	1 (0.3)
15 (375)	1 (0.3)	42 (1050)	1 (0.3)
18 (450)	1 (0.3)	48 (1200)	1 (0.3)
24 (600)	1 (0.3)	60 (1500)	2 (0.6)
30 (750)	1 (0.3)		

Notes:

1. *Minimum covers presented here were calculated assuming Class III backfill material compacted to 95% standard Proctor density or Class II backfill material compacted to 90% standard Proctor density around the pipe, as recommended in Section 5 of the Drainage Handbook, with an additional layer of compacted traffic lane sub-base for a total cover as required. In shallow traffic installations, especially where pavement is involved, a good quality compacted material to grade is required to prevent surface settlement and rutting.*
2. *The minimum covers specified do not include pavement thickness. A pavement section of 0.4' is typical.*
3. *Backfill materials and compaction levels not shown in the table may also be acceptable. Contact ADS for further detail.*
4. *Calculations assume no hydrostatic pressure and native soils that are as strong as the specified minimum backfill recommendations.*

ADS HP STORM 12"- 60" PIPE SPECIFICATION

Scope

This specification describes 12- through 60-inch (300 to 1500 mm) ADS HP Storm pipe for use in gravity-flow storm drainage applications.

Pipe Requirements

ADS HP Storm pipe shall have a smooth interior and annular exterior corrugations.

- 12- through 60-inch (300 to 1500 mm) pipe shall meet ASTM F2881 or AASHTO M330
- Manning's "n" value for use in design shall be 0.012

Joint Performance

Pipe shall be joined using a bell & spigot joint meeting the requirements of ASTM F2881 or AASHTO M330. The joint shall be watertight according to the requirements of ASTM D3212. Gaskets shall meet the requirements of ASTM F477. Gasket shall be installed by the pipe manufacturer and covered with a removable, protective wrap to ensure the gasket is free from debris. A joint lubricant available from the manufacturer shall be used on the gasket and bell during assembly. 12- through 60-inch (300 to 1500 mm) diameters shall have an exterior bell wrap installed by the manufacturer.

Fittings

Fittings shall conform to ASTM F2881 or AASHTO M330. Bell and spigot connections shall utilize a welded or integral bell and valley or inline gaskets meeting the watertight joint performance requirements of ASTM D3212.

Field Pipe and Joint Performance

To assure watertightness, field performance verification may be accomplished by testing in accordance with ASTM F1417 or ASTM F2487. Appropriate safety precautions must be used when field-testing any pipe material. Contact the manufacturer for recommended leakage rates.

Material Properties

Polypropylene compound for pipe and fitting production shall be impact modified copolymer meeting the material requirements of ASTM F2881, Section 5 and AASHTO M330, Section 6.1.

Installation

Installation shall be in accordance with ASTM D2321 and ADS recommended installation guidelines, with the exception that minimum cover in traffic areas for 12- through 48-inch (300 to 1200 mm) diameters shall be one foot (0.3 m) and for 60-inch (1500 mm) diameter the minimum cover shall be 2 ft. (0.6 m) in single run applications. Backfill for minimum cover situations shall consist of Class 1 (compacted), Class 2 (minimum 90% SPD), or Class 3 (minimum 95%) material. Maximum fill heights depend on embedment material and compaction level; please refer to Technical Note 2.04. Contact your local ADS representative or visit our website at www.ads-pipe.com for a copy of the latest installation guidelines.

Pipe Dimensions

Nominal Pipe I.D. in. (mm)	12 (300)	15 (375)	18 (450)	24 (600)	30 (750)	36 (900)	42 (1050)	48 (1200)	60 (1500)
Average Pipe I.D. in (mm)	12.2 (310)	15.1 (384)	18.2 (462)	24.1 (612)	30.2 (767)	36.0 (914)	42.0 (1067)	47.9 (1217)	59.9 (1521)
Average Pipe O.D. in (mm)	14.5 (368)	17.7 (450)	21.4 (544)	28.0 (711)	35.5 (902)	41.5 (1054)	47.4 (1204)	54.1 (1374)	67.1 (1704)
Minimum Pipe Stiffness * @ 5% Deflection ₩in./in. (kN/m²)	75 (517)	60 (414)	56 (386)	50 (345)	46 (317)	40 (276)	35 (241)	35 (241)	30 (207)

*Minimum pipe stiffness values listed; contact a representative for average values.

© ADS, Inc., March 2020

Maximum Cover

Wall thrust generally governs the maximum cover a pipe can withstand and conservative maximum cover heights will result when using the information presented in the *Structures* section (Section 2) of the Drainage Handbook. Table 2 below shows the material properties consistent with the expected performance characteristics for HP Storm materials for a 100-year design life.

The maximum burial depth is highly influenced by the type of backfill and level of compaction around the pipe. General maximum cover limits for ADS HP Storm use in storm drainage applications are shown in Tables 3 for a variety of backfill conditions.

Table 3 was developed assuming pipe is installed in accordance with ASTM D2321 and the *Installation* section (Section 5) of the Drainage handbook. Additionally, the calculations assume no hydrostatic load around the pipe, incorporate the maximum conservative AASHTO LRFD design factors represented in *Structures* section of the Drainage Handbook, use material properties consistent with the expected performance characteristics for HP Storm materials, as shown in Table 2, and assume the native (in-situ) soil is of adequate strength and suitable for installation. For applications requiring fill heights greater than those shown in Table 3 or where hydrostatic pressure due to groundwater is expected, contact an ADS Engineer.

Table 2
ADS HP Storm Mechanical Properties

Resin	ASTM Specification	Allowable Long Term Strain %	Initial Fu (psi)	Initial E (psi)	75-Year Fu (psi)	75-Year E (psi)
Polypropylene, Impact-modified copolymer	ASTM F2881	3.7	3,500	175,000	1,000	28,000

Figure 1
ADS HP Storm Pipe Trench Detail with Uniform Backfill
(Traffic and Non-Traffic Applications)

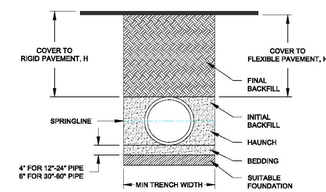

Table 3
Maximum Cover for ADS HP Storm Pipe with Uniform Backfill, ft (m)

Diameter in (mm)	Class 1 Compacted	Class 1 Dumped	Class 2 95%	Class 2 90%	Class 2 85% [3]	Class 3 95%	Class 3 90% [3]	Class 4 95% [3]
12 (300)	41 (12.5)	21 (6.4)	28 (8.5)	21 (6.4)	16 (4.9)	20 (6.1)	16 (4.9)	16 (4.9)
15 (375)	42 (12.8)	21 (6.4)	29 (8.8)	21 (6.4)	16 (4.9)	21 (6.4)	16 (4.9)	16 (4.9)
18 (450)	44 (13.4)	21 (6.4)	30 (9.1)	21 (6.4)	16 (4.9)	22 (6.7)	17 (5.2)	16 (4.9)
24 (600)	37 (11.3)	18 (5.5)	26 (7.9)	18 (5.5)	14 (4.3)	19 (5.8)	14 (4.3)	14 (4.3)
30 (750)	38 (11.9)	19 (5.8)	27 (8.2)	19 (5.8)	14 (4.3)	19 (5.8)	15 (4.6)	14 (4.3)
36 (900)	28 (8.5)	14 (4.3)	20 (6.1)	14 (4.3)	10 (3.0)	14 (4.3)	11 (3.4)	10 (3.0)
42 (1050)	30 (9.1)	14 (4.3)	21 (6.4)	14 (4.3)	10 (3.0)	15 (4.6)	11 (3.4)	10 (3.0)
48 (1200)	29 (8.8)	14 (4.3)	20 (6.1)	14 (4.3)	9 (2.7)	14 (4.3)	10 (3.0)	10 (3.0)
60 (1500)	29 (8.8)	14 (4.3)	20 (6.1)	14 (4.3)	9 (2.7)	14 (4.3)	10 (3.0)	9 (2.7)

Notes:

1. *Results based on calculations shown in the Structures section of the ADS Drainage Handbook (v20.7). Calculations assume no hydrostatic pressure and a density of 120 pcf (1925 kg/m³) for overburden material.*
2. *Installation assumed to be in accordance with ASTM D2321 and the Installation section of the Drainage Handbook.*
3. *For installations using lower quality backfill materials or lower compaction efforts, pipe deflection may exceed the 5% design limit; however controlled deflection may not be a structurally limiting factor for the pipe. For installation where deflection is critical, pipe placement techniques or periodic deflection measurements may be required to ensure satisfactory pipe installation.*
4. *Backfill materials and compaction levels not shown in the table may also be acceptable. Contact ADS for further detail.*
5. *Material must be adequately "knifed" into haunch and in between corrugations. Compaction and backfill material is assumed uniform throughout entire backfill zone.*
6. *Compaction levels shown are for standard Proctor density.*
7. *For projects where cover exceeds the maximum values listed above, contact ADS for specific design considerations.*
8. *See ADS Standard Detail STD-101D for additional details.*

TECHNICAL NOTE

HDPE and HP Storm Connections to Manholes and Structures for Storm Sewer Applications

TN 5.04
March 2016

Introduction

A full line of pipe jointing options is available to fit the requirements of nearly any storm drain or gravity flow project specifications. The joints available range from soil tight split couplers to gasketed soil-tight (ST) and watertight (WT) pipe. When connecting pipe to drainage structures it is important to make those connections with a joint performance at least equal to that of the piping system.

Connection Options

Soil-Tight Performance

When using soil-tight pipe in non-watertight applications, it may be acceptable to grout the void space between the pipe and drainage structure.

Watertight Performance

When using watertight pipe for testable systems, requiring some degree of watertight performance, it is necessary to provide additional measures to insure a watertight connection between the pipe and structure. ASTM F2510/F2510M, "*Standard Specification for Resilient Connectors Between Reinforced Concrete Manhole Structures and Corrugated High Density Polyethylene Drainage Pipes,*" is the governing standard for corrugated HDPE pipe-manhole connections, but specific performance/installation requirements should be verified for each specific project. Along with a full line of adapter fittings available, including the Waterstop® Gasket, are flexible boot fittings provided by other manufactures. Fitting dimensions should be supplied to the manufacturer to insure the proper fitting size and manhole boot connector are supplied.

Installation Recommendations

When installing a manhole adapter on the upstream end, the fitting may be over inserted into the structure temporarily while the adjoining pipe is laid. The spigot piece is then pushed back through the structure and connected to the bell end when pushing the joint together, as shown to the right.

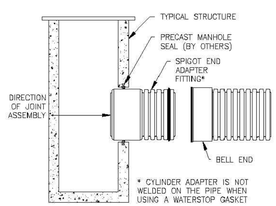

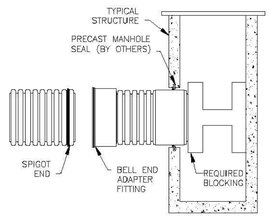

Alternately, when using the adapter fitting in the downstream end of the structure, before pushing the bell and spigot together from inside the structure, it is necessary to provide blocking at the structure to prevent the fitting from moving in the structure, as shown to the left.

Summary

The selection of which manhole connection is best suited for a project is based on the joint and connection requirements along with preferred manhole connection method for the region. It is imperative that prevailing regulations be consulted before selecting a manhole connection. Other options may be available for watertight manhole connections. Refer to 200 Series Standard Details for installation and connection-specific details. Contact your Regional Engineer or Application Engineering for further assistance.

HP STORM TRENCH INSTALLATION DETAIL

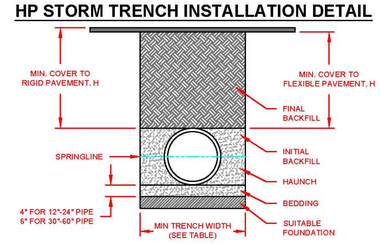

NOTES:

1. ALL PIPE SYSTEMS SHALL BE INSTALLED IN ACCORDANCE WITH ASTM D2321, "STANDARD PRACTICE FOR UNDERGROUND INSTALLATION OF THERMOPLASTIC PIPE FOR SEWERS AND OTHER GRAVITY FLOW APPLICATIONS", LATEST ADDITION, WITH THE EXCEPTION THAT THE INITIAL BACKFILL MAY EXTEND TO THE CROWN OF THE PIPE. SOIL CLASSIFICATIONS ARE PER THE LATEST VERSION OF ASTM D2321. CLASS IVB MATERIALS (MH, CH) AS DEFINED IN PREVIOUS VERSIONS OF ASTM D2321 ARE NOT APPROPRIATE BACKFILL MATERIALS.
2. MEASURES SHOULD BE TAKEN TO PREVENT MIGRATION OF NATIVE FINES INTO BACKFILL MATERIAL, WHEN REQUIRED.
3. FOUNDATION: WHERE THE TRENCH BOTTOM IS UNSTABLE, THE CONTRACTOR SHALL EXCAVATE TO A DEPTH REQUIRED BY THE ENGINEER AND REPLACE WITH SUITABLE MATERIAL AS SPECIFIED BY THE ENGINEER. AS AN ALTERNATIVE AND AT THE DISCRETION OF THE DESIGN ENGINEER, THE TRENCH BOTTOM MAY BE STABILIZED USING A GEOTEXTILE MATERIAL.
4. BEDDING: SUITABLE MATERIAL SHALL BE CLASS I, II, III, OR IV. THE CONTRACTOR SHALL PROVIDE DOCUMENTATION FOR MATERIAL SPECIFICATION TO ENGINEER. COMPACTION SHALL BE SPECIFIED BY THE ENGINEER IN ACCORDANCE WITH TABLE 3 FOR THE APPLICABLE FILL HEIGHTS LISTED. UNLESS OTHERWISE NOTED BY THE ENGINEER, MINIMUM BEDDING THICKNESS SHALL BE 4" (100mm) FOR 12"-24" (300mm-600mm) DIAMETER PIPE; 6" (150mm) FOR 30"-60" (750mm-1500mm) DIAMETER PIPE. THE MIDDLE 1/3 BENEATH THE PIPE INVERT SHALL BE LOOSELY PLACED. PLEASE NOTE, CLASS IV MATERIAL HAS LIMITED APPLICATION AND CAN BE DIFFICULT TO PLACE AND COMPACT; USE ONLY WITH THE APPROVAL OF A SOIL EXPERT.
5. INITIAL BACKFILL: SUITABLE MATERIAL SHALL BE CLASS I, II, III, OR IV IN THE PIPE ZONE EXTENDING TO THE CROWN OF THE PIPE. THE CONTRACTOR SHALL PROVIDE DOCUMENTATION FOR MATERIAL SPECIFICATION TO ENGINEER. MATERIAL SHALL BE INSTALLED AS REQUIRED IN ASTM D2321, LATEST EDITION. COMPACTION SHALL BE SPECIFIED BY THE ENGINEER IN ACCORDANCE WITH TABLE 3 FOR THE APPLICABLE FILL HEIGHTS LISTED. PLEASE NOTE, CLASS IV MATERIAL HAS LIMITED APPLICATION AND CAN BE DIFFICULT TO PLACE AND COMPACT; USE ONLY WITH THE APPROVAL OF A SOIL EXPERT.
6. MINIMUM COVER: MINIMUM COVER, H, IN NON-TRAFFIC APPLICATIONS (GRASS OR LANDSCAPE AREAS) IS 12" (300mm) FROM THE TOP OF PIPE TO GROUND SURFACE. ADDITIONAL COVER MAY BE REQUIRED TO PREVENT FLOTATION. FOR TRAFFIC APPLICATIONS; CLASS I OR II MATERIAL COMPACTED TO 90% SPD AND CLASS III COMPACTED TO 95% SPD IS REQUIRED. FOR TRAFFIC APPLICATIONS, MINIMUM COVER, H, IS 12" (300mm) UP TO 48" (1200mm) DIAMETER PIPE AND 24" (600mm) OF COVER FOR 60" (1500mm) DIAMETER PIPE, MEASURED FROM TOP OF PIPE TO BOTTOM OF FLEXIBLE PAVEMENT OR TO TOP OF RIGID PAVEMENT.
7. FOR ADDITIONAL INFORMATION SEE TECHNICAL NOTE 2.04.

TABLE 1, RECOMMENDED MINIMUM TRENCH WIDTHS

PIPE DIAM.	MIN. TRENCH WIDTH
12" (300mm)	30" (762mm)
15" (375mm)	34" (864mm)
18" (450mm)	39" (991mm)
24" (600mm)	48" (1219mm)
30" (750mm)	56" (1422mm)
36" (900mm)	64" (1626mm)
42" (1050mm)	72" (1829mm)
48" (1200mm)	80" (2032mm)
60" (1500mm)	96" (2438mm)

TABLE 2, MINIMUM RECOMMENDED COVER BASED ON VEHICLE LOADING CONDITIONS

PIPE DIAM.	SURFACE LIVE LOADING CONDITION: H-25	HEAVY CONSTRUCTION (75T AXLE LOAD) *
12" - 48" (300mm - 1200mm)	12" (305mm)	48" (1219mm)
60" (1500mm)	24" (610mm)	60" (1524mm)

* VEHICLES IN EXCESS OF 75T MAY REQUIRE ADDITIONAL COVER

TABLE 3, MAXIMUM COVER FOR ADS HP STORM PIPE, ft

	CLASS I	CLASS II		CLASS III		CLASS IV
PIPE DIA	COMPACTED	95%	90%	85%	95%	90%	95%
12" (300mm)	41 (12.5m)	28 (8.5m)	21 (6.4m)	16 (4.9m)	20 (6.1m)	16 (4.9m)	16 (4.9m)
15" (375mm)	42 (12.8m)	29 (8.8m)	21 (6.4m)	16 (4.9m)	21 (6.4m)	16 (4.9m)	16 (4.9m)
18" (450mm)	44 (13.4m)	30 (9.1m)	21 (6.4m)	16 (4.9m)	22 (6.7m)	17 (5.2m)	16 (4.9m)
24" (600mm)	37 (11.3m)	26 (7.9m)	18 (5.5m)	14 (4.3m)	19 (5.8m)	14 (4.3m)	14 (4.3m)
30" (750mm)	39 (11.9m)	27 (8.2m)	19 (5.8m)	14 (4.3m)	19 (5.8m)	15 (4.6m)	14 (4.3m)
36" (900mm)	28 (8.5m)	20 (6.1m)	14 (4.3m)	10 (3.0m)	14 (4.3m)	11 (3.4m)	10 (3.0m)
42" (1050mm)	30 (9.1m)	21 (6.4m)	14 (4.3m)	10 (3.0m)	15 (4.6m)	11 (3.4m)	10 (3.0m)
48" (1200mm)	29 (8.8m)	20 (6.1m)	14 (4.3m)	9 (2.7m)	14 (4.3m)	10 (3.0m)	10 (3.0m)
60" (1500mm)	29 (8.8m)	20 (6.1m)	14 (4.3m)	9 (2.7m)	14 (4.3m)	10 (3.0m)	9 (2.7m)

FILL HEIGHT TABLE GENERATED USING AASHTO SECTION 12, LOAD RESISTANCE FACTOR DESIGN (LRFD) PROCEDURE WITH THE FOLLOWING ASSUMPTIONS:
NO HYDROSTATIC PRESSURE
UNIT WEIGHT OF SOIL (γs) = 120 PCF

REV.	DESCRIPTION	BY	MM/DD/YY	CHK'D
6	REV. MAXIMUM COVER HEIGHTS	RWD	01/11/17	

© 2016 ADS, INC.

ADVANCED DRAINAGE SYSTEMS, INC. ("ADS") HAS PREPARED THIS DETAIL BASED ON INFORMATION PROVIDED TO ADS. THIS DRAWING IS INTENDED TO DEPICT THE COMPONENTS AS REQUESTED. ADS HAS NOT PERFORMED ANY ENGINEERING OR DESIGN SERVICES FOR THIS PROJECT, NOR HAS ADS INDEPENDENTLY VERIFIED THE INFORMATION SUPPLIED. THE INSTALLATION DETAILS PROVIDED HEREIN ARE GENERAL RECOMMENDATIONS AND ARE NOT SPECIFIC FOR THIS PROJECT. THE DESIGN ENGINEER SHALL REVIEW THESE DETAILS PRIOR TO CONSTRUCTION. IT IS THE DESIGN ENGINEERS RESPONSIBILITY TO ENSURE THE DETAILS PROVIDED HEREIN MEETS OR EXCEEDS THE APPLICABLE NATIONAL, STATE, OR LOCAL REQUIREMENTS AND TO ENSURE THAT THE DETAILS PROVIDED HEREIN ARE ACCEPTABLE FOR THIS PROJECT.

TRENCH INSTALLATION DETAIL (HP STORM)
DRAWING NUMBER: STD-101D

4640 TRUEMAN BLVD
HILLIARD, OHIO 43026
ADVANCED DRAINAGE SYSTEMS, INC.

01/26/09
NTS
1 OF 1

NOTE:

CONTRACTOR TO USE POLYPROPYLENE PIPE (PP) MEETING VDOT SPEC. PC-1. USE ADS HP STORM OR EQUIVALENT.

Town of Vienna
Approved
06/09/2021

NOTE:
ALL DETAILS PROVIDED ON THIS SHEET ARE CURRENT AT TIME OF PLAN PREPARATION. CONTRACTOR IS RESPONSIBLE FOR USING CURRENT DETAILS AT TIME OF CONSTRUCTION.

WALTER L. PHILLIPS INCORPORATED
ESTABLISHED 1945
Engineers • Surveyors • Planners
Landscape Architects • Arborists
207 PARK AVENUE
FALLS CHURCH, VIRGINIA 22046
(703) 532-6163 Fax (703) 533-1301
www.WLPINC.com

COMMONWEALTH OF VIRGINIA
KAREN L. S. WHITE
Lic. No.041850
05/25/21
PROFESSIONAL ENGINEER

NO.	DESCRIPTION	DATE	REV. BY	APPROVED

REVISION APPROVED BY

DATE: SUB01: 9/13/2019, SUB02: 06/07/2020, SUB03: 4/19/2021
SUB04: 05/25/2021
SCALE: NONE
DRAWN: DL
CHECKED: KW

DETAILS

444 MAPLE AVENUE WEST

SITE PLAN
TOWN OF VIENNA, VIRGINIA

SHEET: C-0207

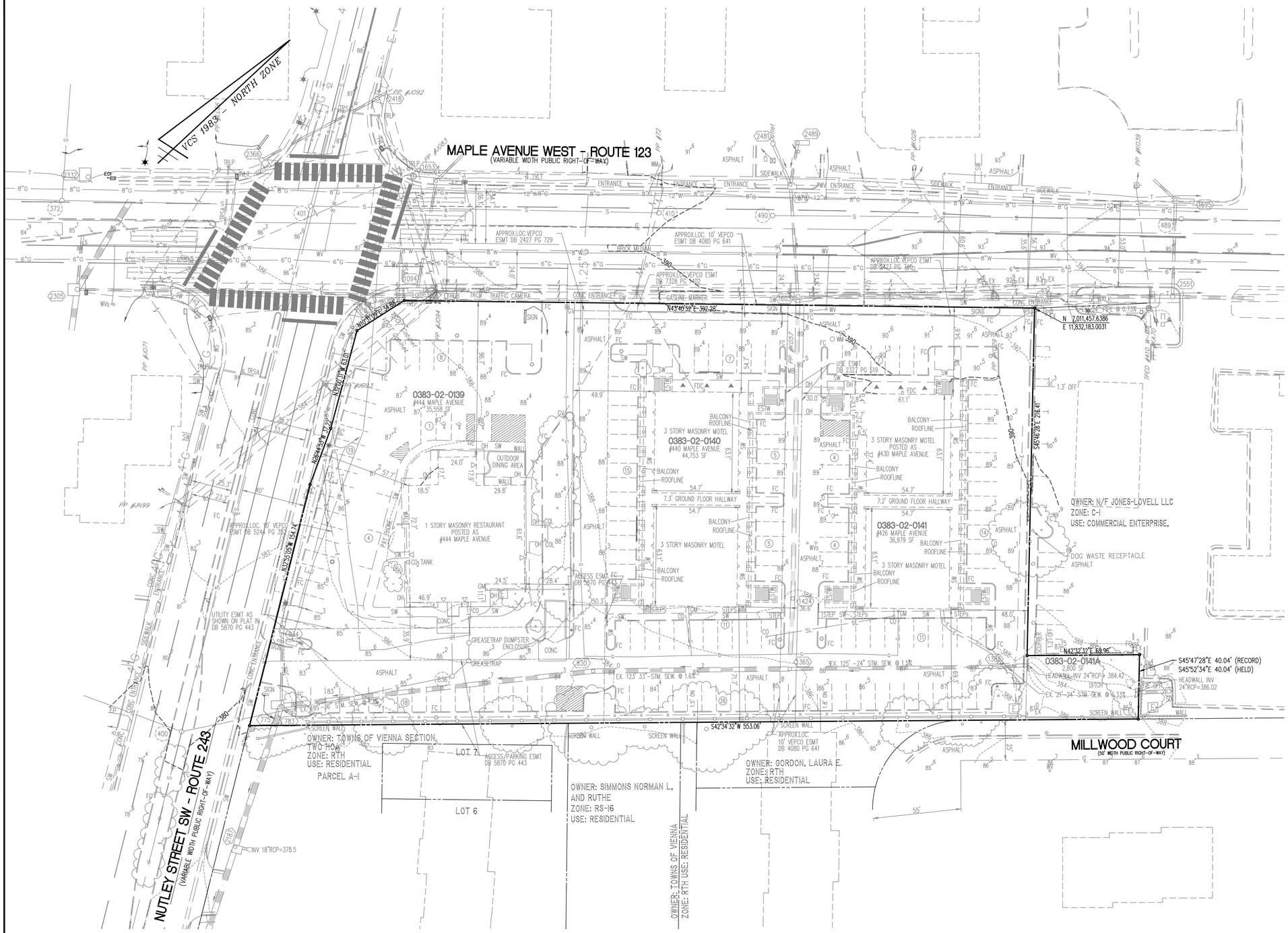

LEGEND

APPROX.LOC.	APPROXIMATE LOCATION
CO	CLEANOUT
COL	COLUMN
CONC	CONCRETE
DB	DEED BOOK
ESMT	EASEMENT
ESTW	ENCLOSED STAIRWELL
EVLT	ELECTRIC VAULT
FC	HEADER CURB
FDC	FIRE DEPARTMENT CONNECTION
GM	GAS METER
GV	GAS VALVE
HC	HANDICAPPED RAMP
IPF	IRON PIPE FOUND
MB	MAIL BOX
N/F	NOW OR FORMERLY
OH	OVERHANG/CANOPY
PG	PAGE
POB	POINT OF BEGINNING
SD	STORM SEWER STRUCTURE
SF	SQUARE FEET
SMH	SANITARY SEWER STRUCTURE
SW	SIDEWALK
TRCB	TRAFFIC CONTROL BOX
TRLP	TRAFFIC LIGHT/SIGNAL POLE
WM	WATER METER
WV	WATER VALVE
	FIRE HYDRANT
	DOORWAY/ENTRANCE
	UTILITY POLE
	LIGHT POLE
—X—	FENCE
	GUY WIRE
	OVERHEAD WIRES
—G—	UNDERGROUND GAS LINE
—T—	UNDERGROUND TELECOMMUNICATIONS LINE
	CURB AND GUTTER
	ELECTRIC TRANSFORMER
	SIGN
	RESERVED FOR HANDICAPPED
	GROUND LIGHT

Town of Vienna
Approved
06/09/2021

NOTE:
SEE C-0303 FOR AS-BUILT DATA

30 0 15 30 60 120
(IN FEET)
1 INCH = 30'

WALTER L. PHILLIPS INCORPORATED ESTABLISHED 1945
Engineers • Surveyors • Planners
Landscape Architects • Arborists
207 PARK AVENUE
FALLS CHURCH, VIRGINIA 22046
(703) 532-6163 Fax (703) 533-1301
www.WLPINC.com

DATE: SUB01: 9/13/2019, SUB02: 06/07/2020, SUB03: 4/19/2021
SUB04: 05/25/2021
SCALE: 1" = 30'
DRAWN: DL
CHECKED: KW

COMMONWEALTH OF VIRGINIA
KAREN L. S. WHITE
Lic. No.041850
05/25/21
PROFESSIONAL ENGINEER

NO.	DESCRIPTION	DATE	REV.' BY	APPROVED	DATE

REVISION APPROVED BY:

EXISTING CONDITIONS PLAN

444 MAPLE AVENUE WEST

SITE PLAN

TOWN OF VIENNA, VIRGINIA

SHEET: C-0301

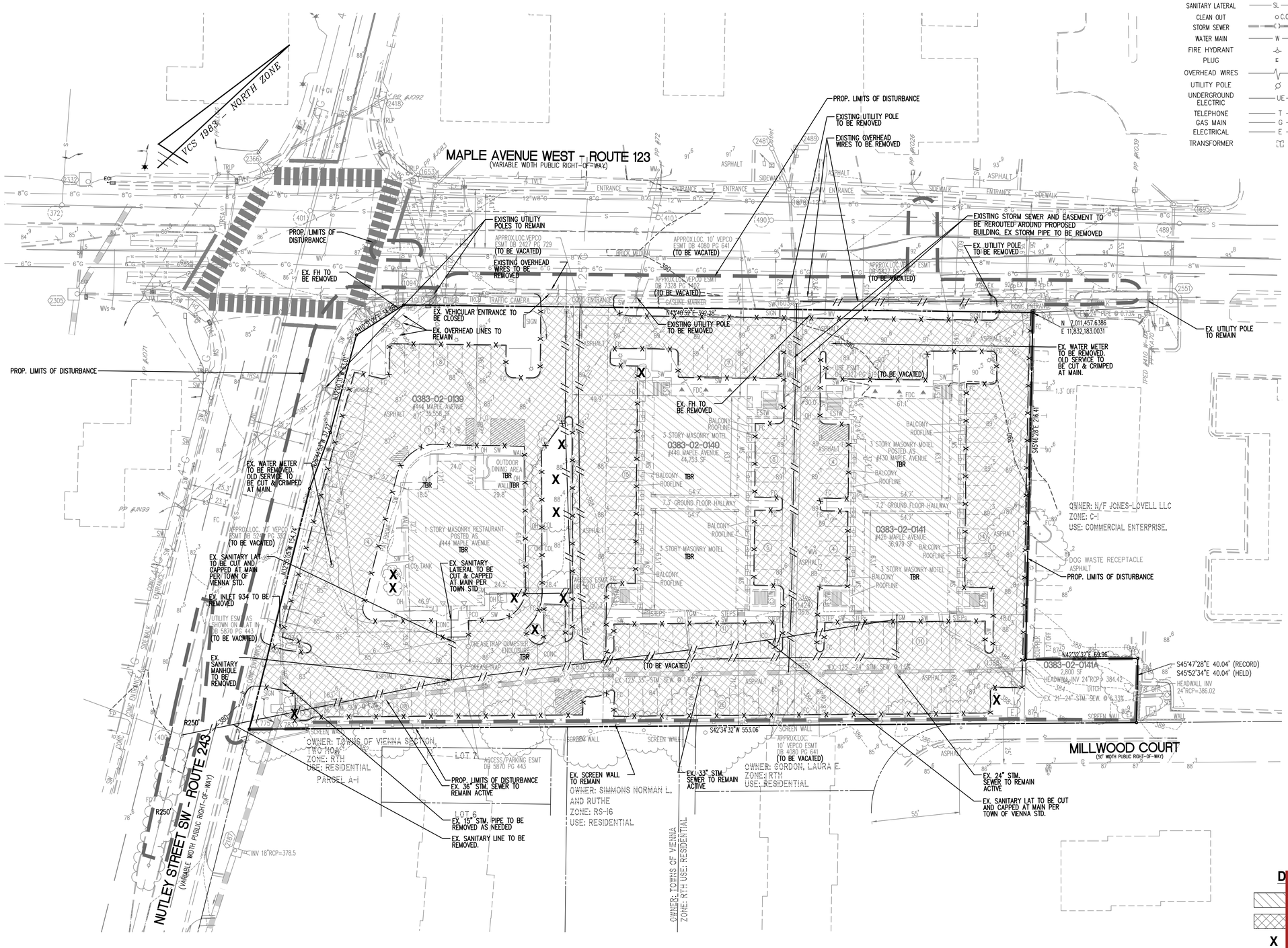

LEGEND

CURB & GUTTER CG-2		HANDICAP RAMP (CG-12)	
TRANSITION FROM CG-6 TO CG-6R	CG-6 CG-6R	GUARDRAIL	
SANITARY SEWER	S	FENCE	
SANITARY LATERAL	SL	TRAFFIC FLOW	
CLEAN OUT	C.O.	LIGHT	
STORM SEWER		DOOR	
WATER MAIN	W	TREES	
FIRE HYDRANT		CONTOURS	260 264
PLUG		SPOT ELEVATION	+264.50
OVERHEAD WIRES		DRAINAGE FLOW DIRECTION	
UTILITY POLE		TOP OF CURB	TC
UNDERGROUND ELECTRIC	UE	BOTTOM OF CURB	BC
TELEPHONE	T	TOP OF WALL	TW
GAS MAIN	G	BOTTOM OF WALL	BW
ELECTRICAL	E	HIGH POINT	H.P.
TRANSFORMER		TEST PIT	TP
		LIMITS OF CLEARING AND GRADING	

DEMOLITION LEGEND

- EXISTING BUILDING TO BE DEMOLISHED
- CONCRETE [illegible] TO BE REMOVED
- X — EXISTING TREE TO BE REMOVED
- // — UTILITY TO BE REMOVED AS NOTED
- X — LIMITS OF CURB TO BE REMOVED
- TBR — TO BE REMOVED
- PROPOSED TEST PIT

Town of Vienna
Approved
06/09/2021

NOTE:
SEE C-0303 FOR AS-BUILT DATA

30 0 15 30 60 120
(IN FEET)
1 INCH = 30'

WALTER L. PHILLIPS INCORPORATED
Engineers • Surveyors • Planners
Landscape Architects • Arborists
207 PARK AVENUE
FALLS CHURCH, VIRGINIA 22046
(703) 532-6163 Fax (703) 533-1301
www.WLPINC.com
ESTABLISHED 1945

COMMONWEALTH OF VIRGINIA
KAREN L. S. WHITE
Lic. No.041850
05/25/21
PROFESSIONAL ENGINEER

DATE:	SUB01: 9/13/2019, SUB02: 06/07/2020, SUB03: 4/19/2021, SUB04: 05/25/2021
SCALE:	1" = 30'
DRAWN:	DL
CHECKED:	KW

REVISION APPROVED BY

NO.	DESCRIPTION	DATE	REV. BY	APPROVED	DATE

DEMOLITION PLAN

444 MAPLE AVENUE WEST

SITE PLAN

TOWN OF VIENNA, VIRGINIA

NOTES

1. THE PROPERTY IS DESIGNATED BY FAIRFAX COUNTY, VIRGINIA, AS HAVING TAX ASSESSMENT MAP NUMBERS 0383-02-0139, ZONED C-1, 0383-02-0140, 0383-02-0141, ZONED C-1 AND RS-16, AND 0383-02-141A, ZONED RS-16.

2. THE PROPERTY IS NOW AS FOLLOWS:
   A: PARCEL 0383-02-0139 IN THE NAME OF VIENNA DEVELOPMENT ASSOCIATES, LLC, JAMES C. MENG AND LUCY C. MENG, AS RECORDED IN DEED BOOK 19478 AT PAGE 1100.
   B: PARCELS 0383-02-0140, 0383-02-141 AND 0383-02-0141A IN THE NAME OF VIENNA DEVELOPMENT ASSOCIATES, LLC, JAMES C. MENG AND LUCY C. MENG, AS RECORDED IN DEED BOOK 19478 AT PAGE 1165.
   ALL OF THE FOREGOING AMONG THE LAND RECORDS OF FAIRFAX COUNTY, VIRGINIA.

3. THIS PLAT AND THE SURVEY ON WHICH IT IS BASED SHOWS ONLY THOSE IMPROVEMENTS WHICH ARE OBSERVABLE AND CAN BE MEASURED USING NORMAL SURVEYING METHODS. THE UNDERGROUND UTILITIES SHOWN HAVE BEEN LOCATED FROM FIELD SURVEY INFORMATION, MISS UTILITY MARKINGS, AND EXISTING RECORDS. THERE IS NO GUARANTEE, EITHER EXPRESS OR IMPLIED, THAT THE UNDERGROUND UTILITIES SHOWN COMPRISE ALL SUCH UTILITIES IN THE AREA, EITHER IN SERVICE OR ABANDONED, OR THAT THE UNDERGROUND UTILITIES SHOWN ARE IN THE EXACT LOCATION INDICATED.

4. THE FEDERAL EMERGENCY MANAGEMENT AGENCY FLOOD INSURANCE RATE MAP FOR FAIRFAX, VIRGINIA, MAP NUMBER 51059C0145E, EFFECTIVE DATE SEPTEMBER 17, 2010, DESIGNATES THE PROPERTY AS BEING IN ZONE X, AREAS DETERMINED TO BE OUTSIDE THE 0.2% ANNUAL CHANCE FLOODPLAIN.

5. TOTAL COMPUTED AREA OF THE PROPERTY IS 120,091 SQUARE FEET OR 2.7569 ACRES. TOTAL RECORD AREA OF THE PROPERTY IS 120,470 SQUARE FEET OR 2.7656 ACRES.

6. THIS PLAT IS BASED ON A CURRENT FIELD SURVEY BY THIS FIRM.

7. EASEMENTS, COVENANTS, CONDITIONS AND RESTRICTIONS, SHOWN AND/OR NOTED HEREON, TAKEN FROM THE COMMITMENTS FOR TITLE INSURANCE PREPARED BY COMMONWEALTH LAND TITLE INSURANCE COMPANY, FILE NUMBER ARL0707009, DATED JUNE 12, 2007, AS TO PARCELS 0383-02-0140, 0383-02-0141 AND 0383-02-0141A, AND FILE NUMBER ARL0707010, DATED JUNE 14, 2007, AS TO PARCEL 0383-02-0139.

8. THE SITE SHOWN HEREON IS REFERENCED TO THE NORTH AMERICAN VERTICAL DATUM OF 1988 AND IS REFERENCED TO THE VIRGINIA COORDINATE SYSTEM OF 1983, [NAD 83(CORS96)(EPOCH:2002.0000)]. THE COMBINED FACTOR WHICH HAS BEEN APPLIED TO THE FIELD DISTANCES TO DERIVE THE REFERENCED COORDINATES IS 0.99994632. THE FOOT DEFINITION USED FOR CONVERSION OF THE MONUMENT COORDINATES AND IN THE PERFORMANCE OF THIS SURVEY IS THE U.S. SURVEY FOOT. CONTOUR INTERVAL IS TWO FEET.

9. THIS SURVEY WAS COMPLETED UNDER THE DIRECT AND RESPONSIBLE CHARGE OF, BRIAN G. BAILLARGEON, L.S. FROM AN ACTUAL [X] GROUND OR [ ] AIRBORNE SURVEY MADE UNDER MY SUPERVISION; THAT THE IMAGERY AND/OR ORIGINAL DATA WAS OBTAINED ON JUNE 8, 2007; AND THAT THIS PLAT, MAP, OR DIGITAL GEOSPATIAL DATA INCLUDING METADATA MEETS MINIMUM ACCURACY STANDARDS UNLESS OTHERWISE NOTED.

LEGAL DESCRIPTION

All of those lots or parcels of land, lying and being situate in the Town of Vienna, Virginia, being the property of Vienna Development Associates, LLC, James C. Meng and Lucy C. Meng, as recorded in Deed Book 19478 at page 1100, and in Deed Book 19478 at page 1165, all among the Land Records of Fairfax County, Virginia, being more particularly described by metes and bounds, as follows:

Beginning at a point in the westerly right-of-way line of Millwood Court, said point being the south corner of now-or-formerly Vienna Medical West Condominium Association; thence with the northerly right-of-way line of Millwood Court, the same course continued with the westerly line of Lot 10 and Parcel A1, Townes of Vienna, now-or-formerly Simmons, and Parcel A-1, Section Two, Townes of Vienna, S 42° 34' 32" W, 553.06 feet to a point in the northerly right-of-way line of Nutley Street, Route 243; thence with the northerly right-of-way line of Nutley Street, Route 243, N 32° 55' 05" W, 154.74 feet to a point; thence N 26° 44' 53" W, 37.22 feet to a point; thence N 32° 00' 31" W, 63.01 feet to a point; thence N 10° 31' 09" E, 34.88 feet to a point in the easterly right-of-way line of Maple Avenue, Route 123; thence with the easterly right-of-way line of Maple Avenue, Route 123, N 43° 40' 52" E, 392.28 feet to a point, said point being a corner of now-or-formerly Jones-Lovell Enterprise, LLC; thence with the southerly line of now-or-formerly Jones-Lovell Enterprise, LLC, S 45° 46' 28" E, 216.41 feet to a point; thence N 42° 32' 32" E, 70.02 feet to a point in the southerly line of now-or-formerly Vienna Medical West Condominium Association; thence with the southerly line of now-or-formerly Vienna Medical West Condominium Association S 45° 47' 28" E, 40.04 feet to a point of beginning and containing an area of 120,091 square feet, or 2.7569 acres, more or less.

Being the same property as described in the title reports.

AS-BUILT DATA

SD 2418	
CURB INLET TOP =	387.48
15"RCP OUT (SD 2366)=	384.90
SD 1653	
CURB INLET TOP =	387.91
15"RCP IN (NORTH)=	385.41
15"RCP OUT (SD 1094)=	385.36
SD 1094	
CURB INLET TOP =	387.59
15"RCP IN (SD 1653)=	383.74
15"RCP OUT (SD 2305)=	383.67
SD 2305	
CURB INLET TOP =	384.27
15"RCP IN (SD 1094)=	377.45
42"x28"CMP IN (NORTH)=	377.44
18"RCP IN (WEST)=	377.57
42"x28"CMP OUT (SOUTH)=	377.38
SD 1679	
CURB INLET TOP =	391.13
18"RCP IN (WEST)=	386.41
18"RCP IN (S.WEST)=	386.04
18"RCP OUT (SD 1603)=	385.93
SD 2551	
MANHOLE TOP =	395.08
24"RCP IN (NORTH)=	386.33
18"RCP IN (SD 1695)=	387.46
24"RCP OUT (SD 1603)=	385.93
SD 1603	
CURB INLET TOP =	391.08
18"RCP IN (SD 1679)=	384.29
24"RCP IN (SD 2551)=	384.23
30"RCP OUT (SD 1424)=	383.97
SD 1424	
DROP INLET, GRATE TOP =	387.52
30"RCP IN (SD 1603)=	382.71
30"RCP OUT (SD 1365)=	382.39

SD 1388	
DROP INLET, GRATE TOP =	387.57
24"RCP IN (HEADWALL)=	383.09
24"RCP OUT (SD 1365)=	382.77
SD 1365	
DROP INLET, GRATE TOP =	385.62
30"RCP IN (SD 1424)=	380.96
24"RCP IN (SD 1388)=	380.87
33"RCP OUT (SD 830)=	380.12
SD 830	
DROP INLET, GRATE TOP =	383.39
33"RCP IN (SD 1365)=	378.14
36"RCP OUT (SD 775)=	377.49
SD 934	
CURB INLET TOP =	385.31
15"RCP OUT (SD 775)=	378.36
SD 783	
CURB INLET TOP =	382.06
12"RCP OUT (SD 775)=	377.53
SD 775	
STORM STRUCTURE TOP =	381.13
15"RCP IN (SD 934)=	377.03
12"RCP IN (SD 783)=	377.13
36"RCP IN (SD 830)=	375.44
42"RCP OUT (SOUTH)=	374.55
SD 2187	
STORM STRUCTURE TOP =	381.98
42"RCP IN (SD 775)=	373.86
18"RCP IN(END SECTION)=	377.17
42"RCP OUT (SOUTH)=	373.81
SMH 836	
MANHOLE TOP =	385.87
DROP INV (GREASE TRAP)=	380.62
6" INV DROP (BOTTOM)=	376.07
6" INV IN (BUILDING)=	376.10
6" INV IN (CLEANOUT)=	375.97
6" INV OUT (SMH 732)=	375.94
SMH 400	
MANHOLE TOP =	380.60
6" INV IN (SMH 401)=	370.74
8" INV IN (SMH 836)=	370.72
8" INV IN (WEST)=	370.38
8" INV OUT (SOUTH)=	370.05

SMH 410	
MANHOLE TOP =	389.85
8"INV OUT (SMH 401)=	385.40
SMH 401	
MANHOLE TOP =	386.73
8"INV IN (N.WEST)=	379.95
8"INV IN (SMH 410)=	379.53
8"INV OUT (SMH 372)=	379.33
8"INV OUT (SMH 400)=	379.21
SMH 372	
MANHOLE TOP =	384.32
8"INV IN (N.WEST)=	379.25
8"INV IN (SMH 401)=	378.38
8"INV OUT (S.WEST)=	378.38
SMH 490	
MANHOLE TOP =	390.82
LAT INV IN (S.WEST)=	387.56
LAT INV IN (N.WEST)=	387.26
8"INV OUT (SMH 489)=	387.02
SMH 489	
MANHOLE TOP =	394.76
8"INV IN (SMH 490)=	386.04
8"INV OUT (N.EAST)=	385.84

Town of Vienna
Approved
06/09/2021

WALTER L. PHILLIPS INCORPORATED ESTABLISHED 1945
Engineers • Surveyors • Planners
Landscape Architects • Arborists
207 PARK AVENUE
FALLS CHURCH, VIRGINIA 22046
(703) 532-6163 Fax (703) 533-1301
www.WLPINC.com

DATE: SUB01: 9/13/2019, SUB02: 06/07/2020, SUB03: 4/19/2021
SUB04: 05/25/2021
SCALE: 1" = 30'
DRAWN: DL
CHECKED: KW

COMMONWEALTH OF VIRGINIA
KAREN L. S. WHITE
Lic. No.041850
05/25/21
PROFESSIONAL ENGINEER

REVISION APPROVED BY

NO.	DESCRIPTION	DATE	REV. BY	APPROVED	DATE

AS-BUILT DATA

444 MAPLE AVENUE WEST

SITE PLAN

TOWN OF VIENNA, VIRGINIA

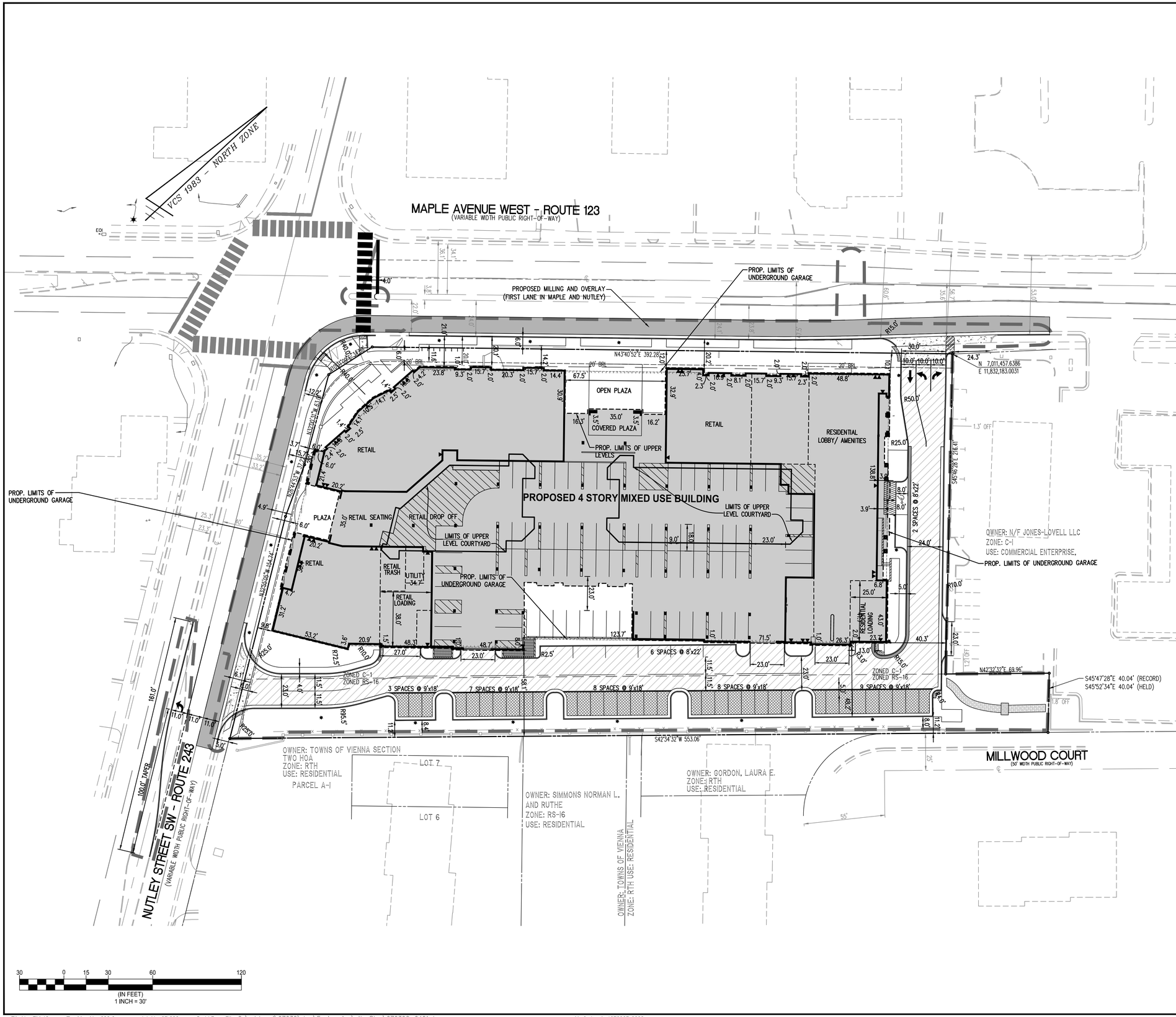

LEGEND

PROPOSED	DESCRIPTION	EXISTING
	CURB & GUTTER CG-2	
CG-6R CG-6	TRANSITION FROM CG-6 TO CG-6R	CG-6 CG-6R
S	SANITARY SEWER	S
SL	SANITARY LATERAL	SL
C.O.	CLEAN OUT	C.O.
	STORM SEWER	
W	WATER MAIN	W
	FIRE HYDRANT	
	PLUG	
	OVERHEAD WIRES	
	UTILITY POLE	
UE	UNDERGROUND ELECTRIC	UE
T	TELEPHONE	T
G	GAS MAIN	G
E	ELECTRICAL	E
	TRANSFORMER	
	HANDICAP RAMP (CG-12)	
	GUARDRAIL	
X X X	FENCE	X X X
	TRAFFIC FLOW	
	LIGHT	
	DOOR	
	TREES	
260 264	CONTOURS	260 264
+264.50	SPOT ELEVATION	+264.50
	DRAINAGE FLOW DIRECTION	
TC	TOP OF CURB	TC
BC	BOTTOM OF CURB	BC
TW	TOP OF WALL	TW
BW	BOTTOM OF WALL	BW
HP	HIGH POINT	H.P.
TP	TEST PIT	
	LIMITS OF CLEARING AND GRADING	

NOTES

1. SEE SHEETS C-0402 FOR LAYOUT PLAN.
2. SEE SHEETS C-0202 – C-0205 FOR CONSTRUCTION DETAILS.
3. SEE BUILDING PLANS FOR ARCHITECTURAL INFORMATION (UNDER SEPARATE COVER).
4. PAVEMENT AND SIDEWALK PATTERNS SHOWN FOR INFORMATION ONLY. SEE LANDSCAPE PLANS (UNDER SEPARATE COVER) FOR PATTERNS AND DETAILS. FINAL PATTERNS AND MATERIALS TO BE DETERMINED BY THE OWNER PRIOR TO INSTALLATION.
5. EXISTING SITE FEATURES DEPICTED ON THIS PLAN ARE FROM A FIELD RUN SURVEY PERFORMED BY THIS FIRM AND DATED 06/08/2007.
6. SEE PARKING TABULATIONS ON SHEET C-0201
7. ALL CURB RADII TO BE 5' UNLESS SPECIFIED.
8. SEE ARCHITECTURAL PLANS FOR PARKING GARAGE STRIPING/SIGNAGE.
9. PARALLEL ADA PARKING SPACE TO MEET CURRENT ADA REQUIREMENTS FOR SIZE, GRADING, STRIPING AND SIGNAGE

PAVEMENT LEGEND

- PROPOSED MILL AND OVERLAY
- PERMEABLE PAVERS
- ON SITE ASPHALT (SEE C-0202)

Town of Vienna
Approved
06/09/2021

WALTER L. PHILLIPS INCORPORATED
ESTABLISHED 1945
Engineers • Surveyors • Planners
Landscape Architects • Arborists
207 PARK AVENUE
FALLS CHURCH, VIRGINIA 22046
(703) 532-6163 Fax (703) 533-1301
www.WLPINC.com

DRAWN: DL
CHECKED: KW
DATE: SUB01: 9/13/2019, SUB02: 06/07/2020, SUB03: 4/19/2021
SUB04: 05/25/2021
SCALE: 1" = 30'

COMMONWEALTH OF VIRGINIA
KAREN L. S. WHITE
Lic. No.041850
05/25/21
PROFESSIONAL ENGINEER

REVISION APPROVED BY

NO.	DESCRIPTION	DATE	REV. BY	APPROVED	DATE

GEOMETRIC AND PAVEMENT PLAN

444 MAPLE AVENUE WEST

SITE PLAN

TOWN OF VIENNA, VIRGINIA

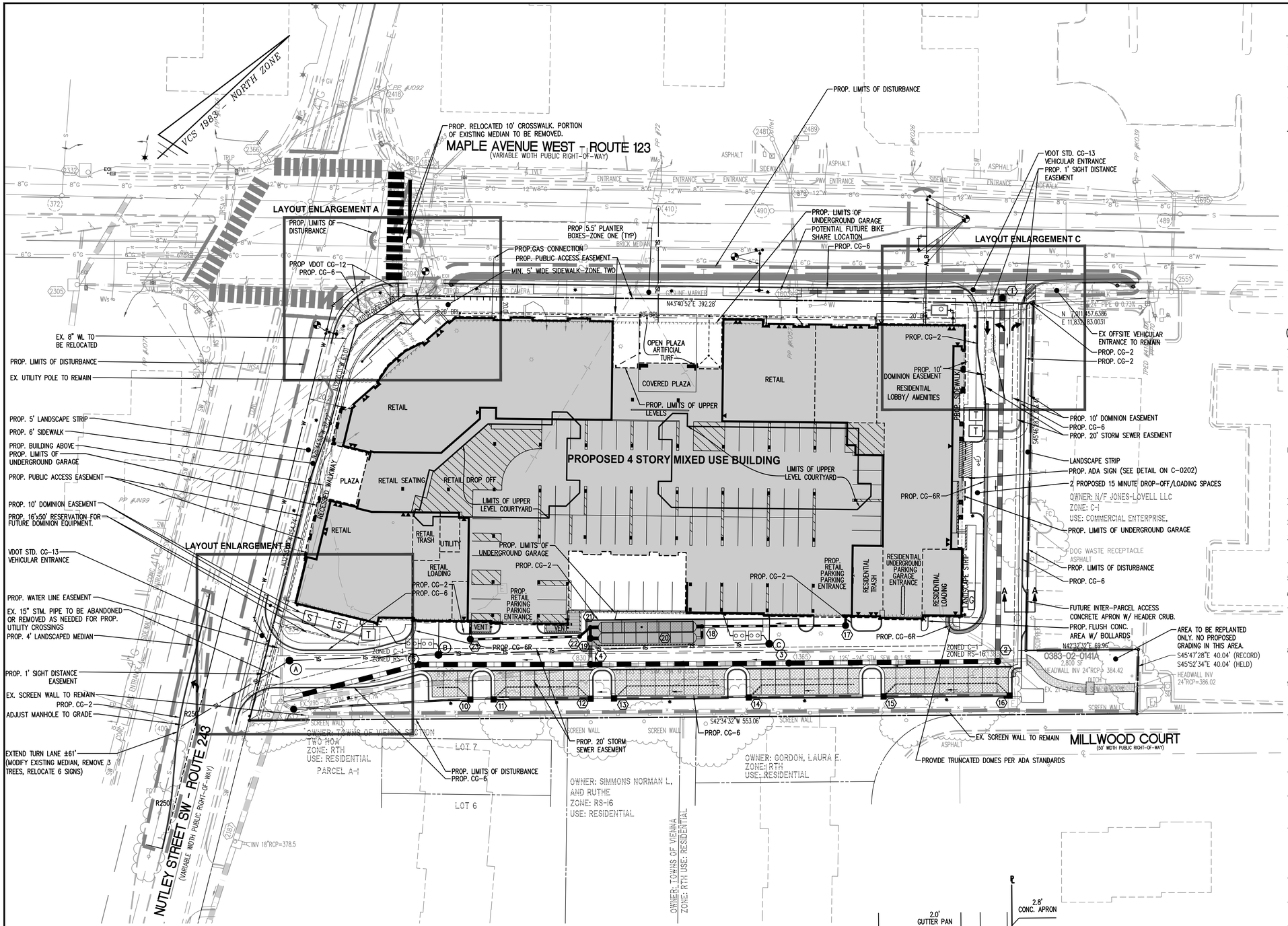

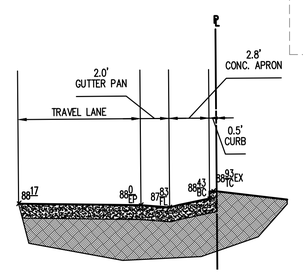

SECTION A-A: FUTURE PARCEL CONNECTION ENTRANCE

SCALE: 1" = 5'

LEGEND

PROPOSED	DESCRIPTION	EXISTING
	CURB & GUTTER CG-2	
CG-6R CG-6	TRANSITION FROM CG-6 TO CG-6R	CG-6 CG-6R
S	SANITARY SEWER	S
SL	SANITARY LATERAL	SL
C.O.	CLEAN OUT	C.O.
	STORM SEWER	
W	WATER MAIN	W
	FIRE HYDRANT	
	PLUG	
	OVERHEAD WIRES	
	UTILITY POLE	
UE	UNDERGROUND ELECTRIC	UE
T	TELEPHONE	T
G	GAS MAIN	G
E	ELECTRICAL	E
	TRANSFORMER	
	HANDICAP RAMP (CG-12)	
	GUARDRAIL	
X X X	FENCE	X X X
	TRAFFIC FLOW	
	LIGHT	
	DOOR	
	TREES	
260 264	CONTOURS	260 264
+264 50	SPOT ELEVATION	+264 50
	DRAINAGE FLOW DIRECTION	
TC	TOP OF CURB	TC
BC	BOTTOM OF CURB	BC
TW	TOP OF WALL	TW
BW	BOTTOM OF WALL	BW
HP	HIGH POINT	H.P.
TP	TEST PIT	
	LIMITS OF CLEARING AND GRADING	

NOTES

1. SEE SHEETS C-0401 FOR GEOMETRIC PLAN.
2. SEE SHEETS C-0501 – C-0502 FOR GRADING PLAN.
3. SEE SHEETS C-0202 – C-0205 FOR CONSTRUCTION DETAILS AND NOTES.
4. SEE C-0700s FOR BMP DETAILS.
5. SEE SHEET C-1201 FOR TREE PRESERVATION PLAN.
6. SEE BUILDING PLANS FOR ARCHITECTURAL INFORMATION.
7. PAVEMENT AND SIDEWALK PATTERNS SHOWN FOR INFORMATION ONLY. SEE LANDSCAPE PLANS FOR PATTERNS AND DETAILS. FINAL PATTERNS AND MATERIALS TO BE DETERMINED BY THE OWNER PRIOR TO INSTALLATION.
8. EXISTING SITE FEATURES DEPICTED ON THIS PLAN ARE FROM A FIELD RUN SURVEY PERFORMED BY THIS FIRM AND DATED 06/08/2007.
9. CONTRACTOR RESPONSIBLE FOR ENSURING EXISTING UTILITIES TO REMAIN AND/OR BE RE-USED ARE PROTECTED THROUGHOUT CONSTRUCTION.
10. GAS, ELECTRIC, AND TELECOMMUNICATIONS UTILITIES TO BE DESIGNED AND SPECIFIED BY OTHERS.
11. A LETTER OF PERMISSION IS REQUIRED FOR OFFSITE DISTURBANCE IF IT IS DETERMINED TO BE NECESSARY AT THE TIME OF CONSTRUCTION.
12. A CLEANOUT IS REQUIRED EVERY 100' FOR SANITARY LATERALS PER VIRGINIA PLUMBING CODE.
13. CONTRACTOR TO COORDINATED TIE BACK LOCATIONS WITH EXISTING AND PROPOSED UTILITIES AND OBTAIN APPROVALS REQUIRED BY THE TOWN OF VIENNA.
14. ALL SITE WORK TO MEET TOWN OF VIENNA STANDARDS AND SPECIFICATIONS PER THE CURRENT PUBLIC INFRASTRUCTURE MANUAL (PIM). IF A STANDARD IS NOT INCLUDED IN THE PIM REFER TO THE FAIRFAX COUNTY PUBLIC FACILITIES MANUAL (PFM).
15. ALL STREET CUTS TO MEET VDOT STREET RESTORATION DETAILS
16. RELOCATED STORM SEWER TO BE INSTALLED AND BACKFILLED PER TOWN OF VIENNA STANDARDS.
17. PROPOSED WATER SERVICE FROM THE MAIN TO THE METER MUST BE THE SAME SIZE AS THE WATER METER.

Town of Vienna
Approved
06/09/2021

WALTER L. PHILLIPS INCORPORATED ESTABLISHED 1945
Engineers • Surveyors • Planners
Landscape Architects • Arborists
207 PARK AVENUE
FALLS CHURCH, VIRGINIA 22046
(703) 532-6163 Fax (703) 533-1301
www.WLPINC.com

DATE: SUB01: 9/13/2019, SUB02: 06/07/2020, SUB03: 4/19/2021
SUB04: 05/25/2021
SCALE: 1" = 30'
DRAWN: DL
CHECKED: KW

COMMONWEALTH OF VIRGINIA
KAREN L. S. WHITE
Lic. No.041850
05/25/21
PROFESSIONAL ENGINEER

NO.	DESCRIPTION	DATE	REV. BY	APPROVED	DATE

REVISION APPROVED BY

LAYOUT PLAN

444 MAPLE AVENUE WEST

SITE PLAN

TOWN OF VIENNA, VIRGINIA

LEGEND

PROPOSED	DESCRIPTION	EXISTING
	CURB & GUTTER CG-2	
CG-6R CG-6	TRANSITION FROM CG-6 TO CG-6R	CG-6 CG-6R
S	SANITARY SEWER	S
SL	SANITARY LATERAL	SL
C.O.	CLEAN OUT	C.O.
	STORM SEWER	
W	WATER MAIN	W
	FIRE HYDRANT	
E	PLUG	E
	OVERHEAD WIRES	
	UTILITY POLE	
UE	UNDERGROUND ELECTRIC	UE
T	TELEPHONE	T
G	GAS MAIN	G
E	ELECTRICAL	E
T	TRANSFORMER	
	HANDICAP RAMP (CG-12)	
	GUARDRAIL	
X X X	FENCE	X X X
	TRAFFIC FLOW	
	LIGHT	
	DOOR	
	TREES	
260 264	CONTOURS	260 264
+264 50	SPOT ELEVATION	+264 50
	DRAINAGE FLOW DIRECTION	
TC	TOP OF CURB	TC
BC	BOTTOM OF CURB	BC
TW	TOP OF WALL	TW
BW	BOTTOM OF WALL	BW
HP	HIGH POINT	H.P.
TP	TEST PIT	
	LIMITS OF CLEARING AND GRADING	

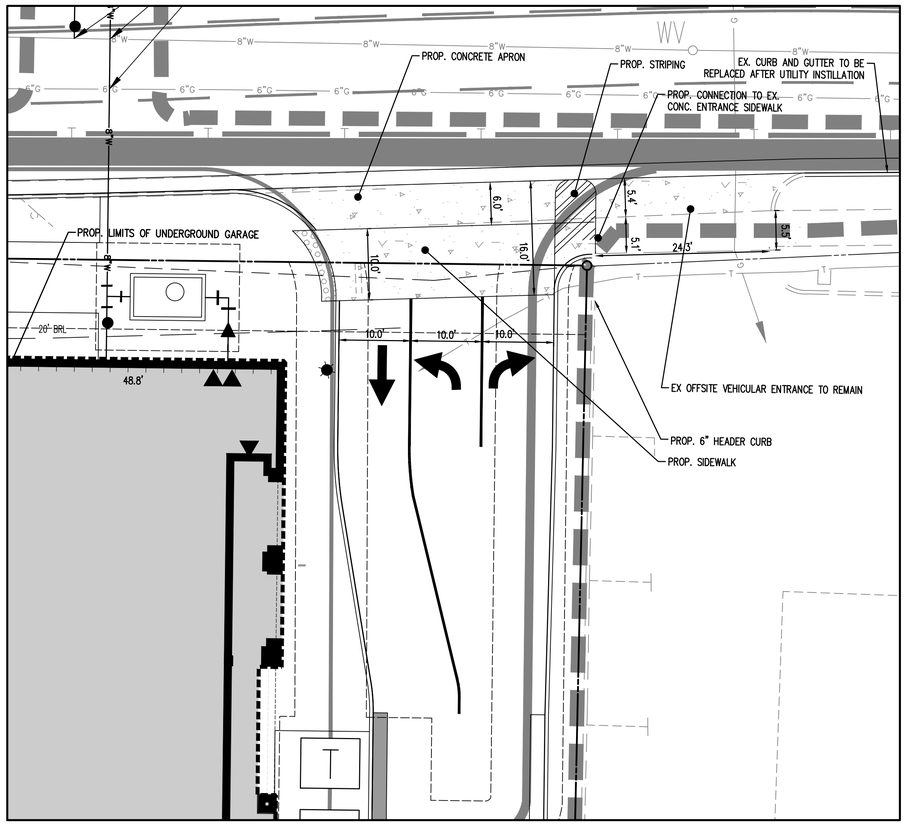

LAYOUT ENLARGEMENT C

SCALE: 1" = 10'

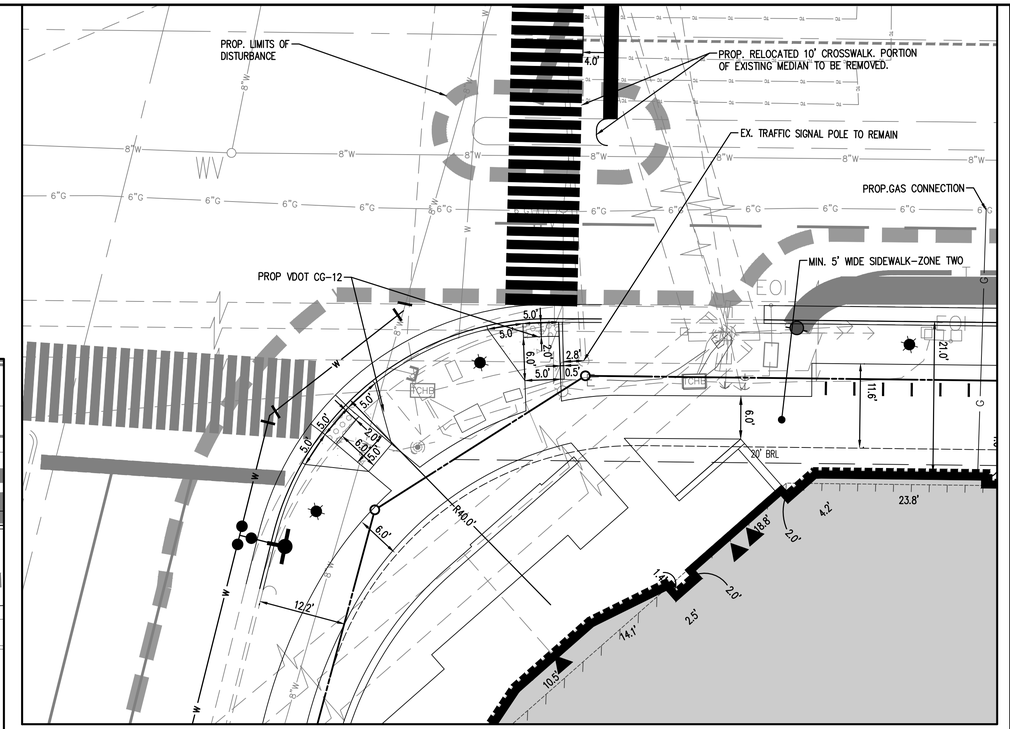

LAYOUT ENLARGEMENT A

SCALE: 1" = 10'

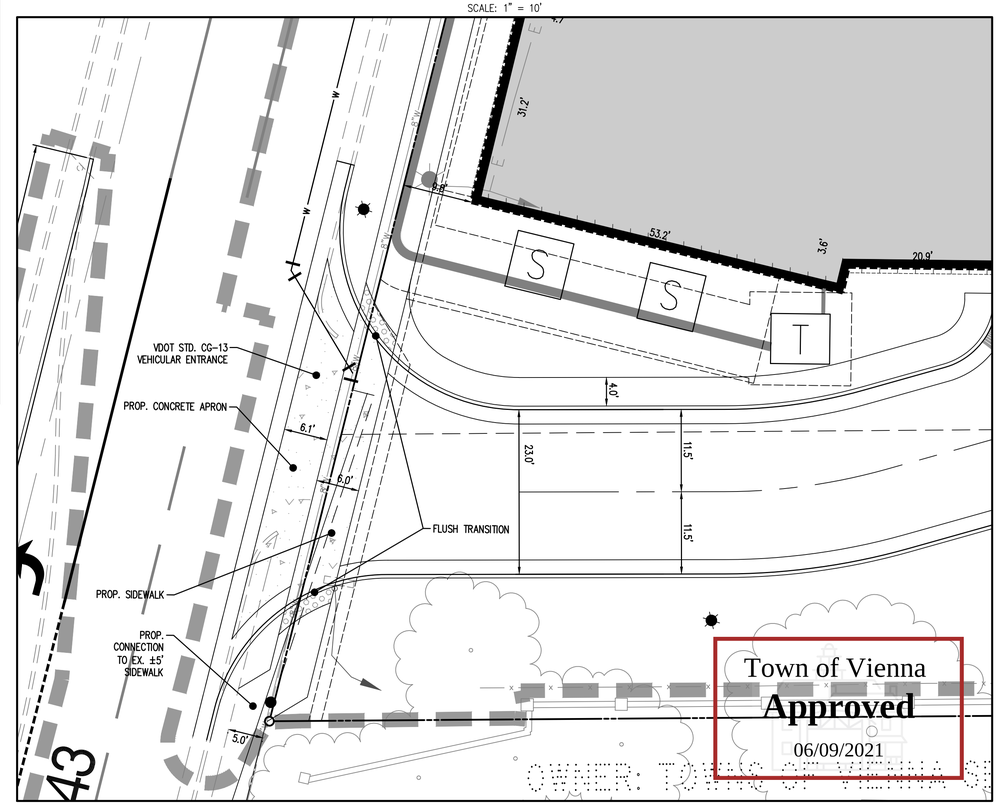

LAYOUT ENLARGEMENT B

SCALE: 1" = 10'

10 0 5 10 20 40

(IN FEET)
1 INCH = 10'

File No. FM-18 Tax Map No. 038-3 Job No. 07-036 Cadd Dwg. File: Q:\sdskproj\07036\dwg\Engineering\site Plan\07036C-0402.dwg Xref: site plan\07036B-0002

WALTER L. PHILLIPS INCORPORATED
ESTABLISHED 1945
Engineers • Surveyors • Planners
Landscape Architects • Arborists
207 PARK AVENUE
FALLS CHURCH, VIRGINIA 22046
(703) 532-6163 Fax (703) 533-1301
www.WLPINC.com

CHECKED: KW
DRAWN: DL

DATE: SUB01: 9/13/2019, SUB02: 06/07/2020, SUB03: 4/19/2021
SUB04: 05/25/2021
SCALE: 1" = 30'

COMMONWEALTH OF VIRGINIA
KAREN L. S. WHITE
Lic. No.041850
05/25/21
PROFESSIONAL ENGINEER

REVISION APPROVED BY

NO.	DESCRIPTION	DATE	REV. BY	APPROVED	DATE

LAYOUT ENLARGEMENTS

444 MAPLE AVENUE WEST

SITE PLAN

TOWN OF VIENNA, VIRGINIA

SHEET: C-0403

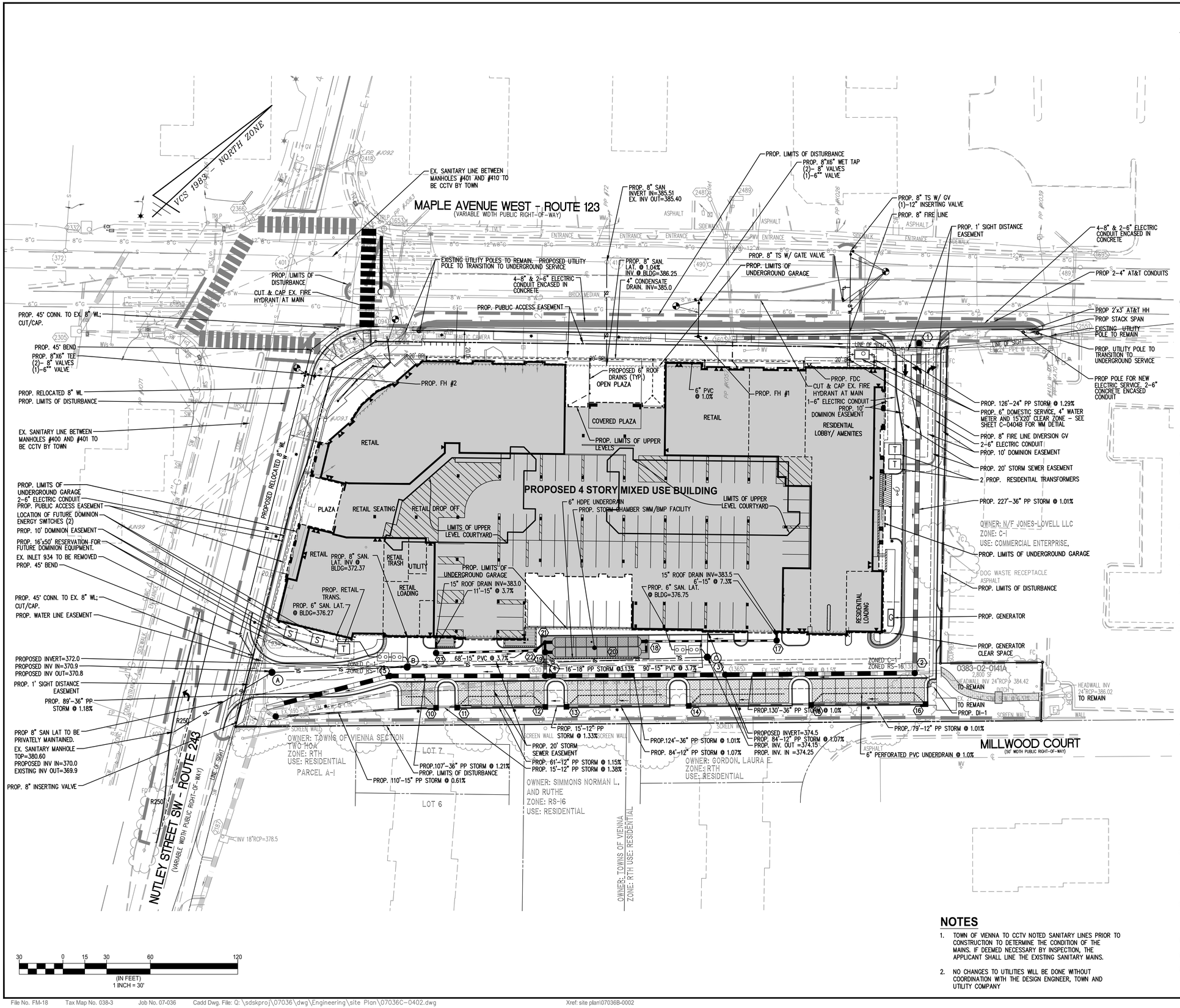

LEGEND

PROPOSED	DESCRIPTION	EXISTING
	CURB & GUTTER CG-2	
CG-6R CG-6	TRANSITION FROM CG-6 TO CG-6R	CG-6 CG-6R
S	SANITARY SEWER	S
SL	SANITARY LATERAL	SL
C.O.	CLEAN OUT	C.O.
	STORM SEWER	
W	WATER MAIN	W
	FIRE HYDRANT	
	PLUG	
	OVERHEAD WIRES	
	UTILITY POLE	
UE	UNDERGROUND ELECTRIC	UE
T	TELEPHONE	T
G	GAS MAIN	G
E	ELECTRICAL	E
	TRANSFORMER	
	HANDICAP RAMP (CG-12)	
	GUARDRAIL	
X X X	FENCE	X X X
	TRAFFIC FLOW	
	LIGHT	
	DOOR	
	TREES	
260 264	CONTOURS	260 264
+264 50	SPOT ELEVATION	+264 50
	DRAINAGE FLOW DIRECTION	
TC	TOP OF CURB	TC
BC	BOTTOM OF CURB	BC
TW	TOP OF WALL	TW
BW	BOTTOM OF WALL	BW
HP	HIGH POINT	H.P.
TP	TEST PIT	
	LIMITS OF CLEARING AND GRADING	

TOWN OF VIENNA WATER MAIN CONSTRUCTION NOTES

1. WATER MAIN CONSTRUCTION SHALL COMPLY WITH THE LATEST ISSUE OF THE TOWN OF VIENNA PUBLIC INFRASTRUCTURE MANUAL (PIM), VIRGINIA STATE WATERWORKS REGULATIONS, VDOT ROAD & BRIDGE SPECIFICATIONS & STANDARDS, AND FAIRFAX COUNTY PUBLIC FACILITY MANUAL (PFM).
2. THREE (3) DAYS PRIOR TO COMMENCING THE WATER MAIN CONSTRUCTION, THE DEVELOPER/OWNER SHALL NOTIFY THE TOWN OF VIENNA, DEPARTMENT OF PUBLIC WORKS, WATER & SEWER DIVISION, 703-255-6380.
3. ALL WATER MAINS SHALL HAVE A MINIMUM COVER OF FOUR (4) FEET UNLESS OTHERWISE APPROVED BY THE TOWN OF VIENNA.
4. BACKFLOW PREVENTER IS ABSOLUTELY REQUIRED FOR TEMPORARY CONSTRUCTION, IRRIGATION SYSTEMS OR VEHICLE WASH AREAS, WHERE AS REQUIRED BY THE STATE WATERWORKS REGULATIONS.
5. THE DEVELOPER AGREES TO ACCEPT FULL RESPONSIBILITY AND ALL COSTS FOR THE INSTALLATION OF WATER MAINS AND APPURTENANCES, INCLUDING ANY ADJUSTMENTS IN ALIGNMENT AND GRADE OR RELOCATION TO EXISTING WATER FACILITIES DUE TO THE DEVELOPMENT OF THIS PROPERTY, ANY REPAIR AND MAINTENANCE REQUIRED PRIOR TO FINISH GRADING AND SURFACING OF THE STREETS AND/OR EASEMENTS. FINAL ACCEPTANCE WILL NOT BE CONSIDERED OR GRANTED UNTIL AFTER THE STREETS HAVE BEEN SURFACED OR THE EASEMENTS FINALLY GRANTED.
6. ALL TS, BENDS AND VALVES NEED TO BE CONNECTED WITH MEGALUGS RETAINER GLANDS AND BLOCKED.
7. BEFORE THE START OF CONSTRUCTION, THE DEVELOPER MUST PROVIDE THE FOLLOWING INFORMATION AND/OR EVIDENCE OF COMPLIANCE WITH ALL APPLICABLE REGULATIONS AND LAWS:
   a. IF ANY EASEMENTS ARE NEEDED, TWO (2) COPIES OF THE RECORDED EASEMENT MUST BE PROVIDED, INCLUDING THE PLACE, DATE AND REFERENCE OF THE RECORDED EASEMENT.
   b. WRITTEN NOTICE OF THE TENTATIVE STARTING DATE OF CONSTRUCTION, WHICH MUST BE A MINIMUM OF ONE (1) WEEK FOLLOWING THE DATE OF NOTICE, IS NEEDED. IN ADDITION, THE DEVELOPER MUST PROVIDE THE NAMES AND PHONE NUMBERS OF TWO (2) EMERGENCY CONTACTS.
8. WATER VALVES SHALL ONLY BE OPERATED BY THE TOWN OF VIENNA PERSONNEL. THE CONTRACTOR IS REQUIRED TO PROVIDE TWO (2) WORKING DAYS NOTICE OF ANY SHUTDOWN REQUIRED. WATER DISRUPTIONS TO EXISTING CUSTOMERS SHALL BE KEPT TO A MINIMUM WHICH MAY REQUIRE THE CONTRACTOR TO INSTALL INSERTING VALVES.
9. TOWN WORK HOURS FOR WATER AND SEWER ARE MONDAY THROUGH FRIDAY, 7:00AM - 3:30PM, WITH THE EXCEPTION OF HOLIDAYS. ANY INSPECTION OR SHUT DOWNS OUTSIDE OF WORKING HOURS WILL BE ADDITIONAL FEES.
10. ALL VALVE COVERS SHALL BE STAMPED, WATER.
11. ALL FIRE HYDRANTS SHALL BE MUELLER.
12. DEVELOPER IS RESPONSIBLE FOR ALL ADJUSTMENTS DUE TO FIELD CONDITIONS.

Town of Vienna
Approved
06/09/2021

NOTES

1. TOWN OF VIENNA TO CCTV NOTED SANITARY LINES PRIOR TO CONSTRUCTION TO DETERMINE THE CONDITION OF THE MAINS. IF DEEMED NECESSARY BY INSPECTION, THE APPLICANT SHALL LINE THE EXISTING SANITARY MAINS.
2. NO CHANGES TO UTILITIES WILL BE DONE WITHOUT COORDINATION WITH THE DESIGN ENGINEER, TOWN AND UTILITY COMPANY

WALTER L. PHILLIPS INCORPORATED
ESTABLISHED 1945
Engineers • Surveyors • Planners
Landscape Architects • Arborists
207 PARK AVENUE
FALLS CHURCH, VIRGINIA 22046
(703) 532-6163 Fax (703) 533-1301
www.WLPINC.com

DATE: SUB01: 9/13/2019, SUB02: 06/07/2020, SUB03: 4/19/2021, SUB04: 05/25/2021
SCALE: 1" = 30'
DRAWN: DL
CHECKED: KW

COMMONWEALTH OF VIRGINIA
KAREN L. S. WHITE
Lic. No.041850
05/25/21
PROFESSIONAL ENGINEER

REVISION APPROVED BY:					
NO.	DESCRIPTION	DATE	REV. BY	APPROVED	DATE

UTILITY PLAN

444 MAPLE AVENUE WEST

SITE PLAN

TOWN OF VIENNA, VIRGINIA

SHEET: C-0404