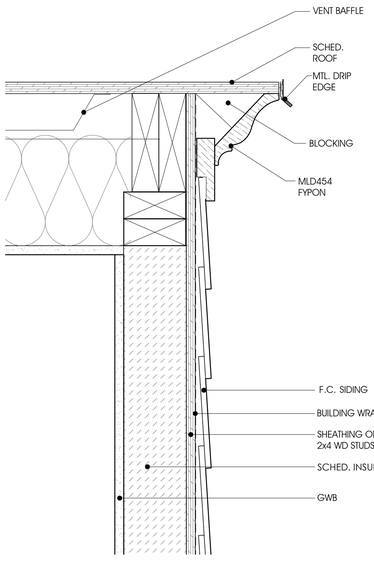

E DORMER SIDE WALL SECTION
3"=1'-0"

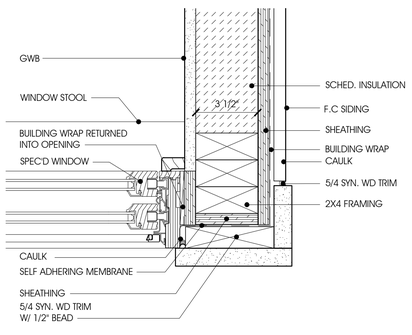

D WINDOW JAMB DETAIL AT DORMER
3"=1'-0"

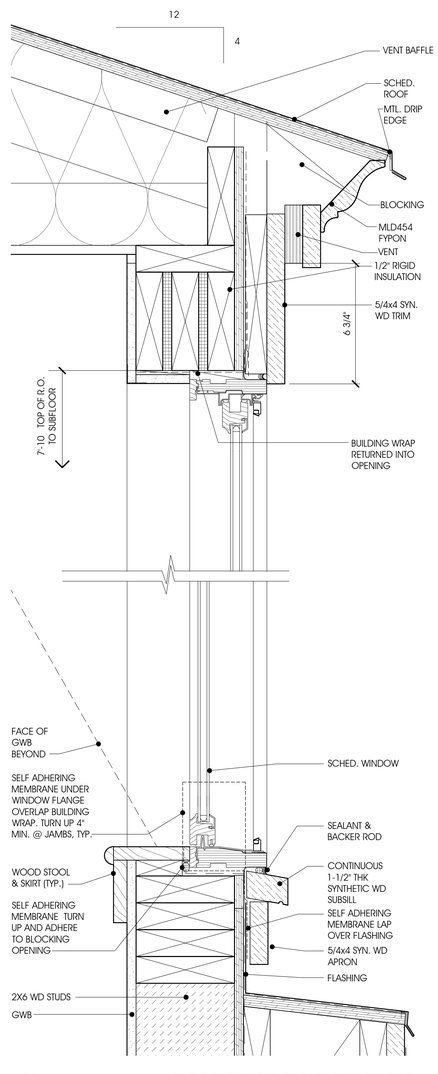

C DORMER WINDOW SILL DETAIL
3"=1'-0"

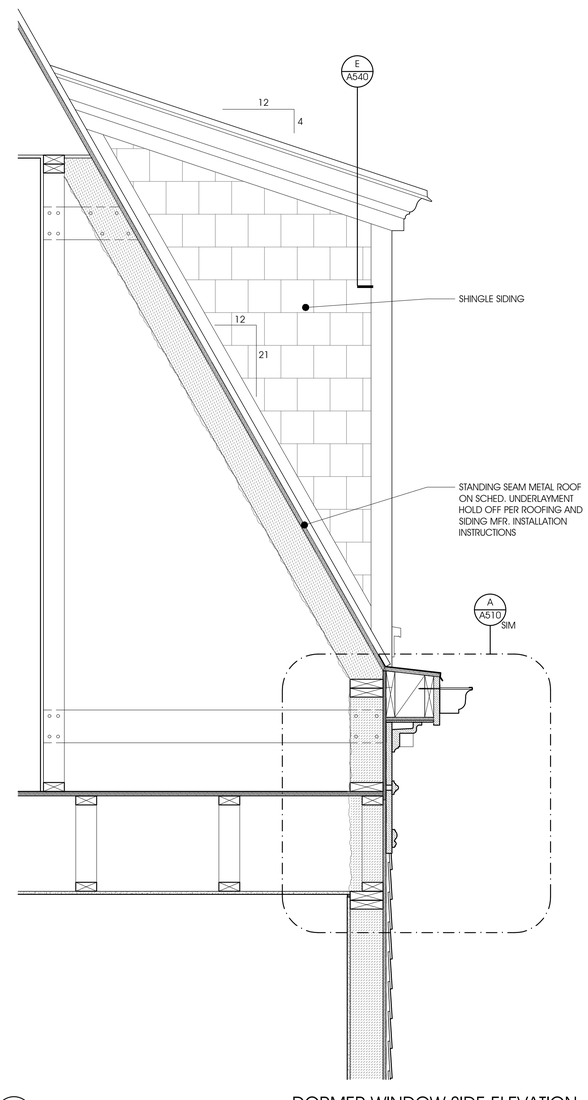

B DORMER WINDOW SIDE ELEVATION
1"=1'-0"

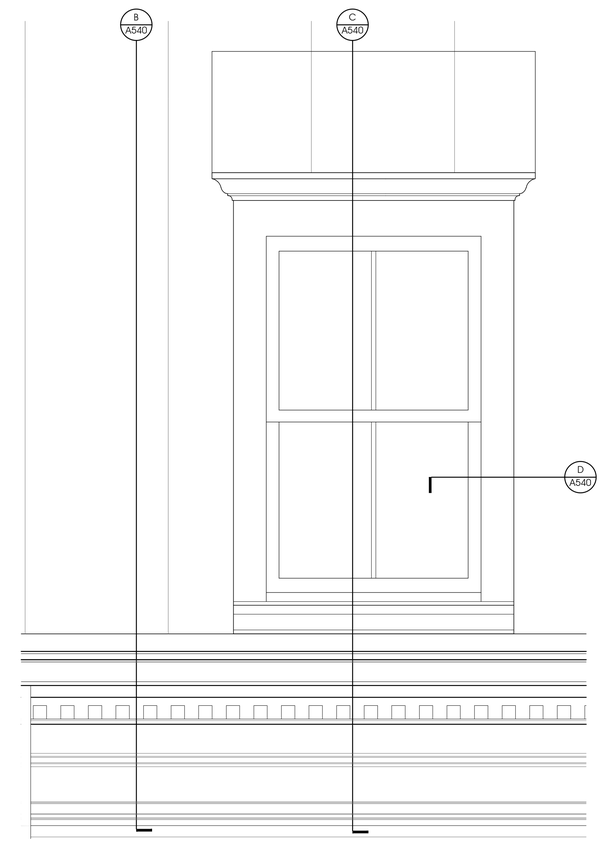

A DORMER WINDOW FRONT ELEVATION
1"=1'-0"

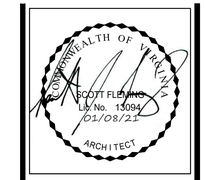

RUST | ORLING
ARCHITECTURE

1215 CAMERON STREET
ALEXANDRIA, VA
22314

T - 703.836.3205
F - 703.548.4779
admin@rustorling.com
www.rustorling.com

CADENCE AT PARK
VIENNA, VIRGINIA

20.014

REVISIONS

DATE	DESCRIPTION

FOR PERMIT
01.08.21

DORMER DETAILS

SHEET NO.

A540

D:\RMA\CAD-MAIN\PROJECTS\20.XXX\20.014 Cadence at Park\Drawings\20.014_A540_Dormer Details.dwg / 1/8/2021 5:59:53 PM admin.kpac Copyright RUST|ORLING Architecture.