MIDTOWN UMBRELLA

1 SQUARE CANTILEVERED
10' X 10'
FILLABLE BASE

1 SQUARE CENTER POLE
8.5' X 8.5'
STEEL BASE

SUNBRELLA FABRICS
COMMERCIAL GRADE
ALUMINUM

WORLD MARKET
STRING LIGHT POLE
WITH TANK BASE
BLACK STEEL

OUTDOOR STRING
LIGHTS

CONNECTABLE,
DIMMABLE, LED
WITH G40 GLOBE
PLASTIC BULBS
ALL WEATHERPROOF

PORTABLE GAS
HEATER
FIRE SENSE BY
HOME DEPOT
HAMMERED
PLATINUM
46,000 BTUS
92" H X 33" W X
33" D

INCLUDES TIP
OVER
PROTECTION
SYSTEM

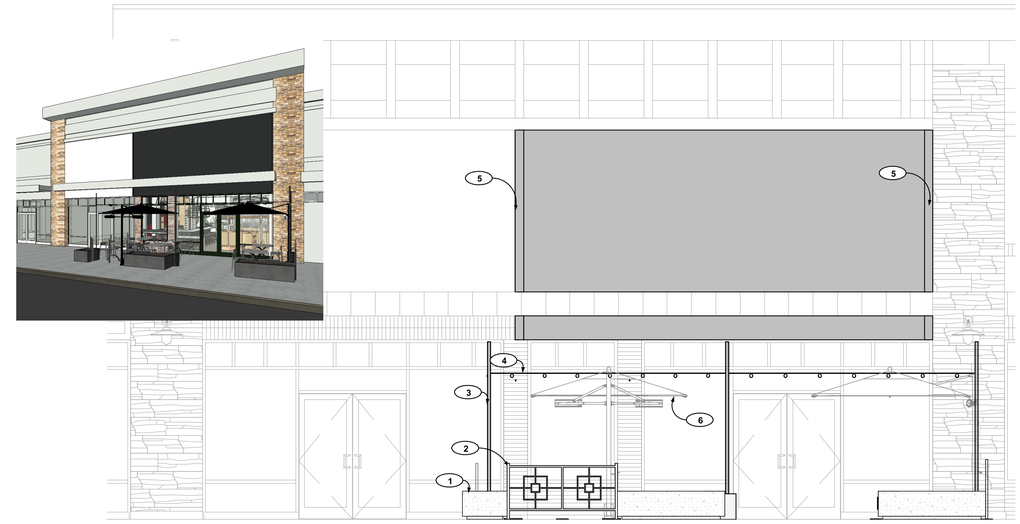

4 PARTIAL EXTERIOR ELEVATION-STOREFRONT
Scale:1/4" = 1'-0"

RESTAURANT
FURNITURE PLUS
7/8" MARBLE WHITE
GRAY AND GOLD
SINTERED STONE
OUTDOOR TABLETOPS

24" X 30" (QUANTITY 4)
48" X 30" (QUANTITY 2)

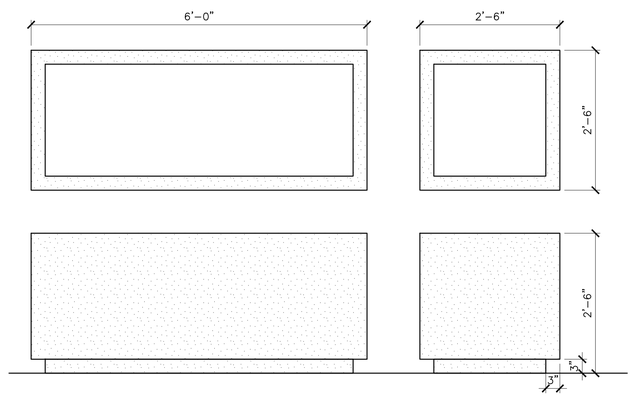

3 EXISTING PLANTERS
NTS

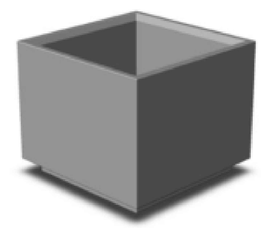

SW 6991

Black Magic

NEW EXTERIOR PAINT COLOR

1. Existing planters to remain, Typ.
2. Portable fences to match existing fences in the Shopping Center complex.
3. Sched. free standing post for string lights.
4. Sched. string lights.
5. Extend 6x trim battens on each end from the upper portion of the existing exterior design to frame the Tenant's face space. The battens and infill between the battens are to be painted with Sched. SW 6991 Exterior Paint Color. Black Magic.
6. Sched. Cantilever Patio Umbrellas.

ROCKLESS

X TABLE BASE BLACK
(LEFT)
FOR TWO-TOPS

T-BASE BLACK (RIGHT)
FOR FOUR-TOPS

DINING HEIGHT

SUPERIOR SEATING
PALMERA
STACKABLE
OUTDOOR
RESTAURANT ROPE
CHAIR

ALUMINUM FRAME

23" W X 24" D X 31" H
7 LBS
WEIGHT CAPACITY:
330 LBS

ALTERNATIVE
CHAIR
OUT DESIGN
GROUP
STRING DINING
SIDE CHAIR

ALUMINUM FRAME

20" W X 23" D X 33"
H
12 LBS

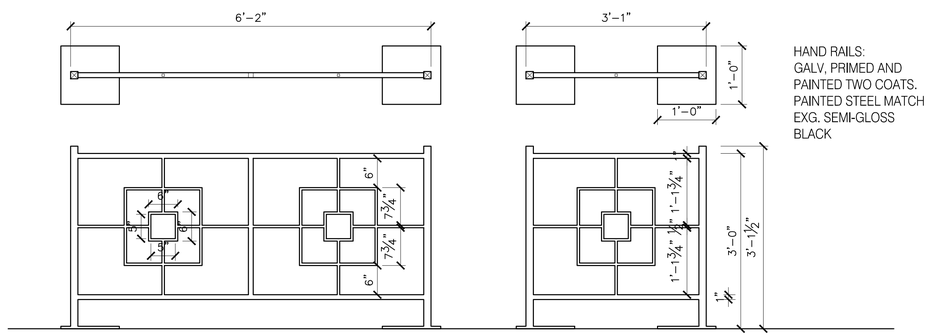

HAND RAILS:
GALV, PRIMED AND
PAINTED TWO COATS.
PAINTED STEEL MATCH
EXG. SEMI-GLOSS
BLACK

2 PORTABLE PATIO FENCE
NTS

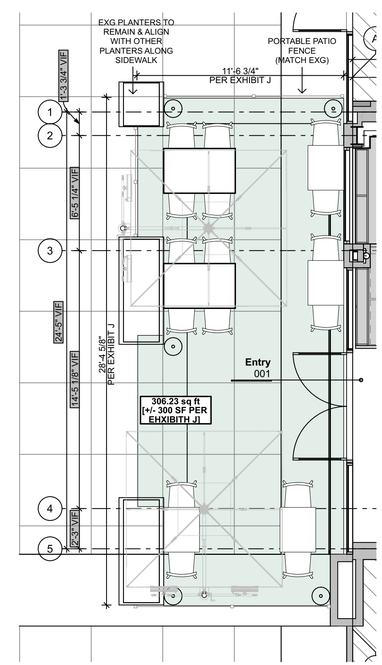

1 PATIO PLAN
Scale:1/4" = 1'-0"

File Name: "BIMcloud: hapstakdemetriou - BIMcloud Software as a Service/24025 Electric Bull (Victor Albisu)/24025 ELECTRIC BULL_25_0221:24025 ELECTRIC BULL_25_0221" Layout: A-502 PATIO RENOVATION EXHIBITION PLAN Printed Date: 2/26/25 at 4:37 PM

Architect
HapstakDemetriou+
ARCHITECTURE | DESIGN
2008 S St NW
Washington, DC 20009
www.hdpllc.com
p. 202.328.0288

Engineer / Consultant
PEG Potomac Energy Group Inc.
2901 Telestar Ct.
Suite 400
Falls Church, VA
22042
TroyM@pegroup.net
(703) 683-5000

Kitchen Vendor / Designer
Design@ShortOrderRecorder.com
(571) 969-3675

Project No.24025

ELECTRIC BULL

176 MAPLE AVE W
VIENNA, VA 22180

COMMONWEALTH OF VIRGINIA
PETER F. HAPSTAK III
Lic. No. 0401016435
ARCHITECT

PROFESSIONAL CERTIFICATION:
I CERTIFY THAT THESE DOCUMENTS WERE PREPARED OR APPROVED BY ME, AND THAT I AM A DULY LICENSED ARCHITECT UNDER THE LAWS OF THE STATE OF *Commonwealth of Virginia*.
LICENSE NUMBER 401016435,
EXPIRATION DATE 06-30-2025.

REV	DATE	DESCRIPTION

PATIO RENOVATION
EXHIBITION PLAN

A-502

Printed: 2/26/25

© HapstakDemetriou + pllc 2025