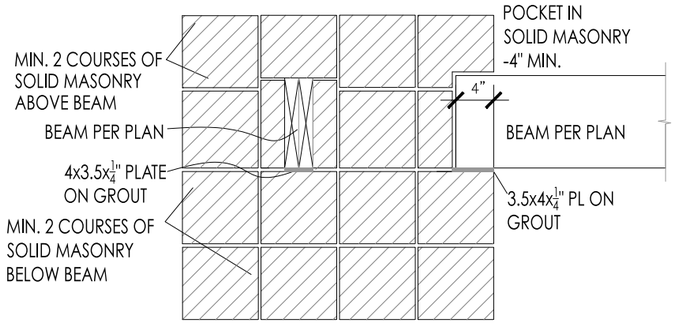

1 BEAM POCKET DETAIL
3/4" = 1'-0"

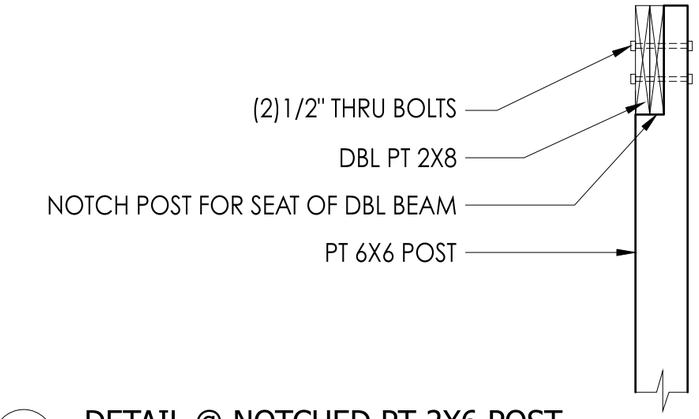

4 DETAIL @ NOTCHED PT 2X6 POST
3/4" = 1'-0"

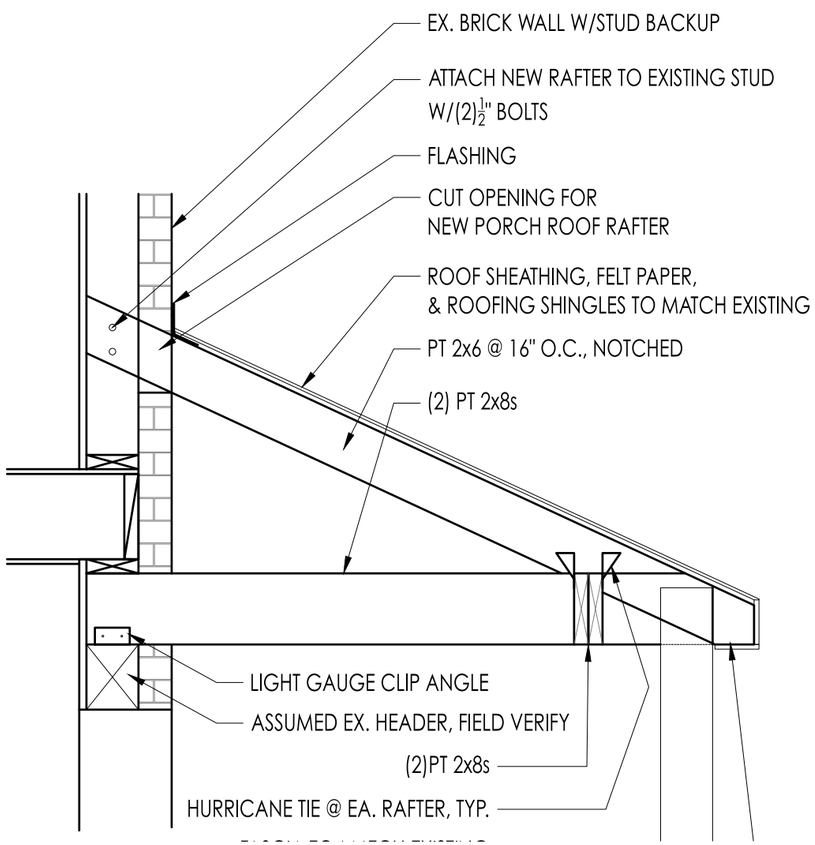

2 PROPOSED SECTION
3/4" = 1'-0"

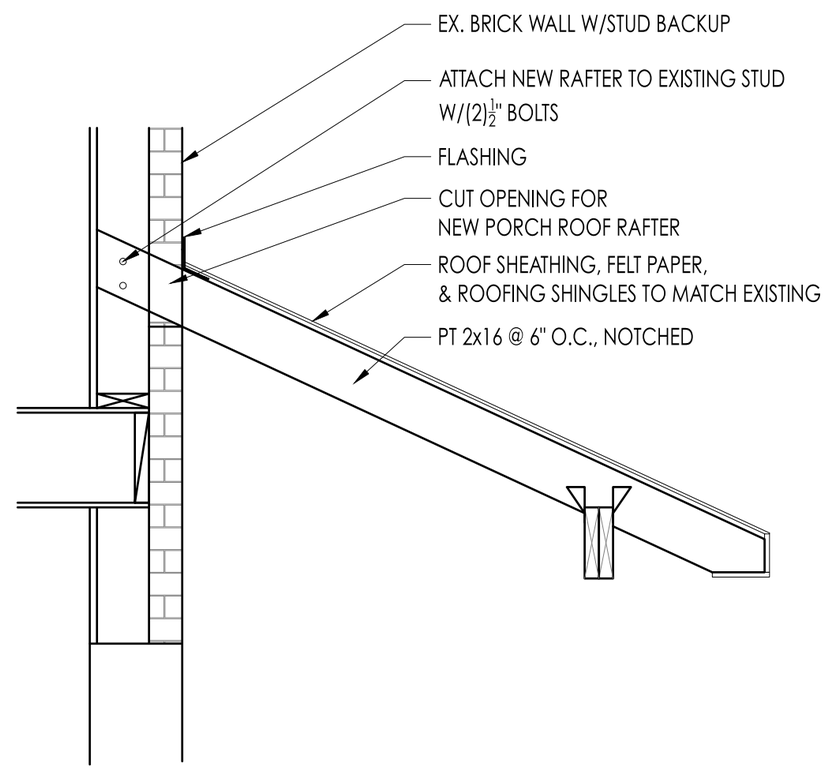

3 PROPOSED SECTION
3/4" = 1'-0"

OHI ENGINEERING
Ohi Engineering Group, PLLC
1050 30th Street NW
Washington, DC 20007
202-449-5588
www.OhiEngineeringGroup.com

PRIVATE RESIDENCE
804 TAPAWINGO ROAD SW
VIENNA, VIRGINIA

REVISIONS

PROJECT No.
DATE: March 10, 2021
SCALE: AS SHOWN

STRUCTURAL DETAILS

S3