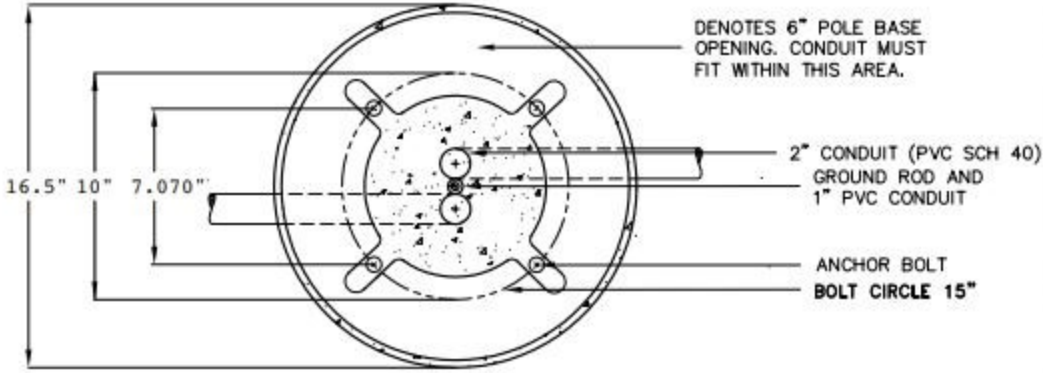

SECTION A–A

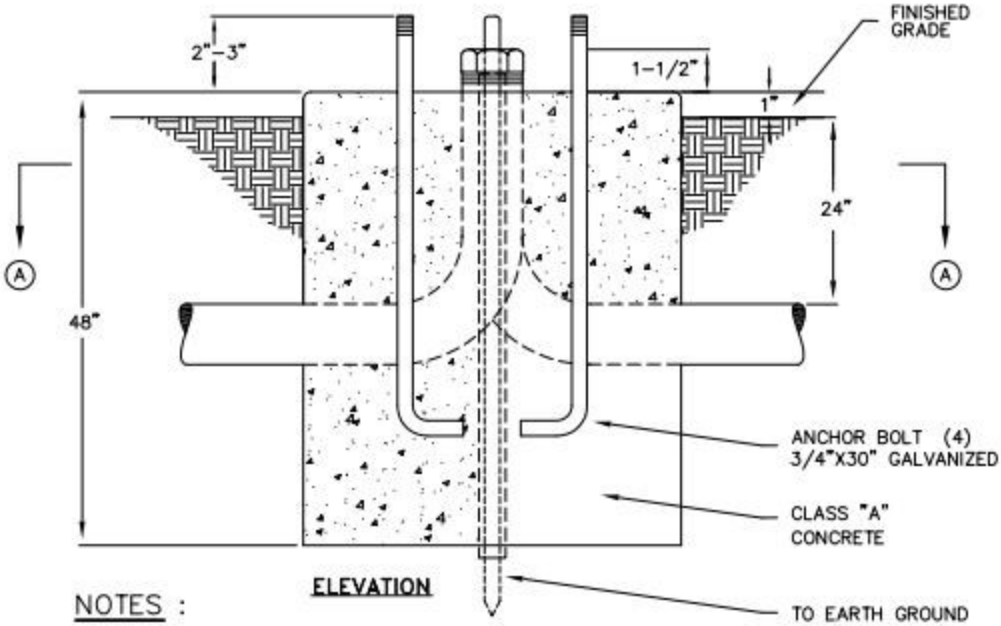

ELEVATION

NOTES :

1. FOUNDATION TOP SHALL BE FINISHED AND LEVEL.
2. BOLT PATTERN SHALL BE PARALLEL TO THE CURB.
3. TOP OF FOUNDATION SHALL BE 1" ABOVE FINISHED GRADE.
4. ALL CONDUIT RADII ARE 90° 24" SWEEPS.
5. GROUND RODS SHALL HAVE AT LEAST 8' IN CONTACT WITH THE EARTH.