NOTE:
1. This is not a construction document. This drawing is to be used for furniture installation only. All dimensions are to be verified in the field.
2. Three dimensional images are provided to convey the general design intent. Actual products may vary in both color and appearance.

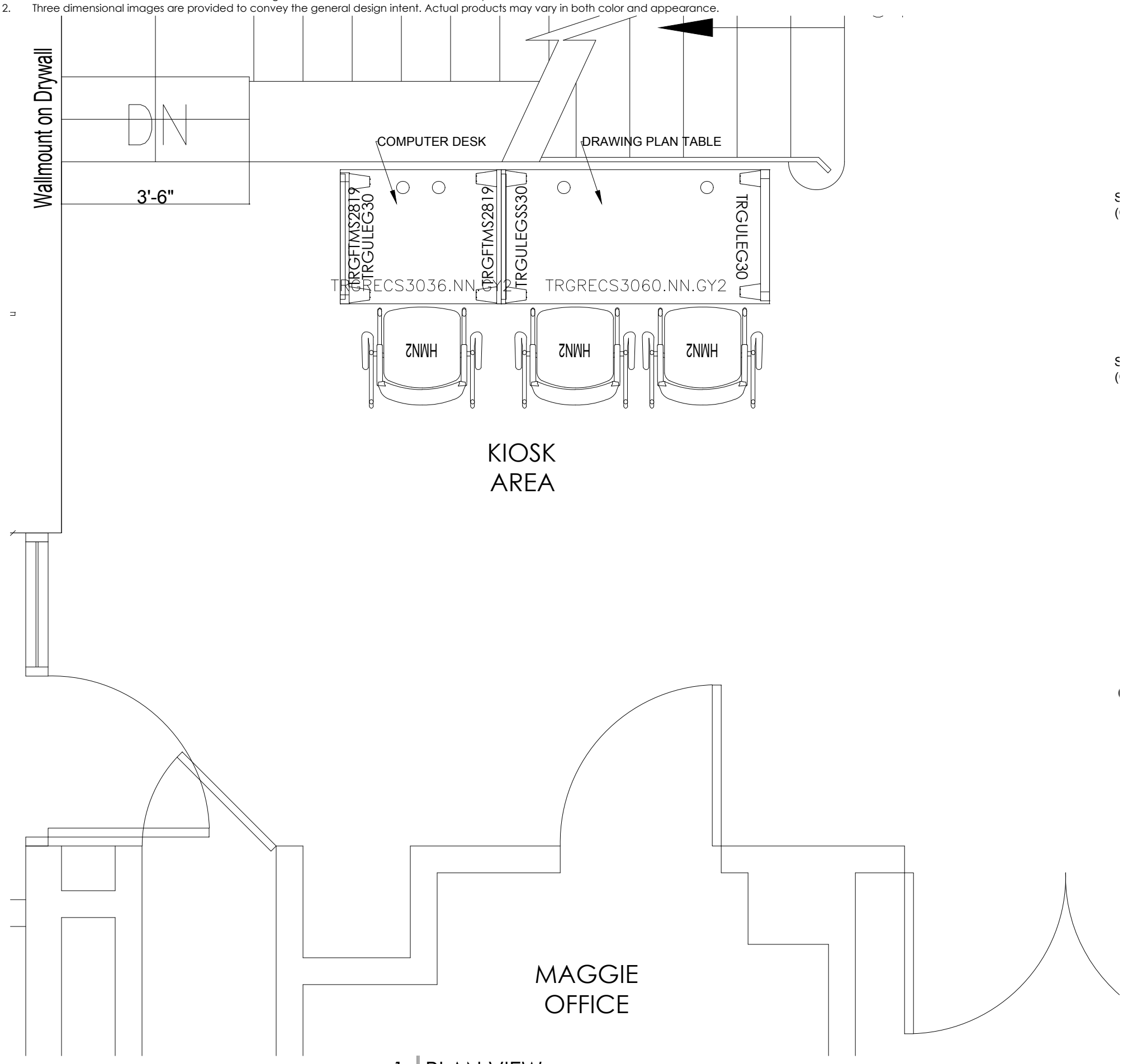

1 PLAN VIEW

SCALE: 1/2" = 1'-0"

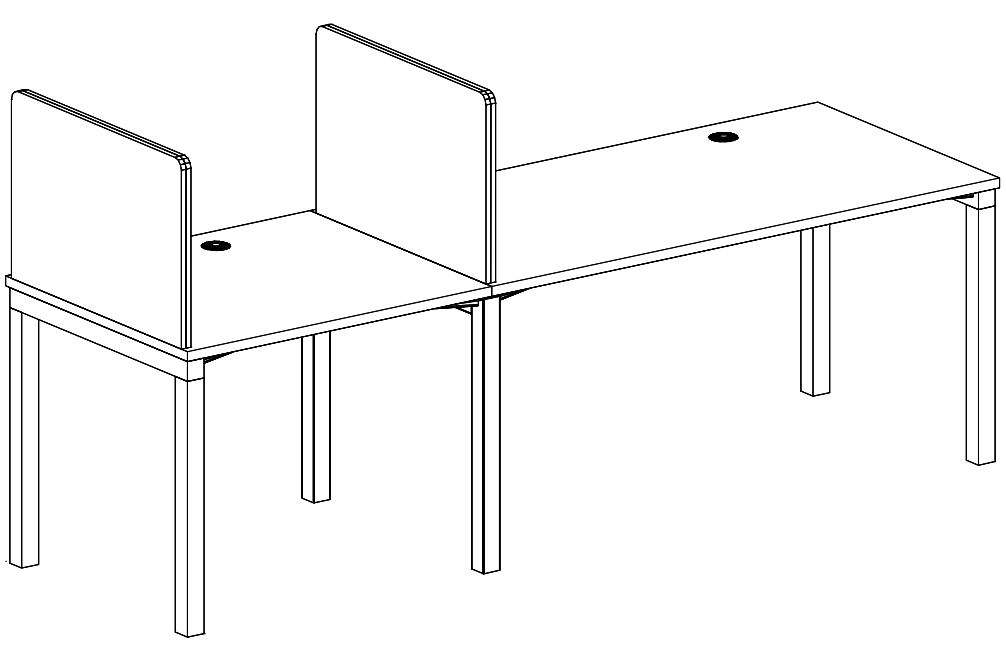

2 ISOMETRIC VIEW

SCALE: NTS

interiors by guernsey
Formerly Systems Furniture Gallery
4425 Brookfield Corporate Drive, Suite 1100
Chantilly, VA 20151
Phone: 703.631.3375 Fax: 703.802.7373
www.interiorsbyguernsey.com

KEY PLAN

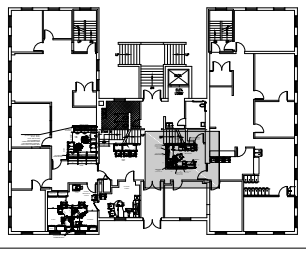

CUSTOMER:
TOWN OF VIENNA
TOWN HALL

ADDRESS:
127 CENTER STREET SOUTH
VIENNA, VA 22180
1ST FLOOR

#	REVISION	DATE
1	ORIGINAL	8/23/18
2	REVISION 1	X

APPROVED BY & DATE X

DRAWN BY	CY
CHECKED BY	X
PROJECT #	JT181007A
SHEET TITLE	KIOSK AREA LAYOUT
SCALE	VARIES
SHEET NO.	F-1
DATE	8-23-2018

w:\government\town of vienna\town hall\dwg\jt181007a_vienna town hall_hr reception_9-5-2018.dwg